Service Manual
Weighing Indicator

KPZ 52-18
KPZ 52-19

Table of Contents

Thank for your purchasing of our Weighing Scale. To guide you to use our product correctly, please read this User Manual carefully to extend the life of machine and to avoid error.

Instructions for Use

1. Please keep scale in a cool and dry place. Do not store under high temperatures.
2. Please keep the scale clean and free from insect infestation.
3. Avoid impacting with other items or overloaded with excessively heavy weights.
   (The load must not exceed the maximum capacity of the scale).
4. If the scale is not going to be used for some time, please clean it and store it in a plastic bag in dry condition. A desiccant sachet may be included to prevent moisture from building up.
5. Any suggestion is warmly welcome.

Preparing to Use the Scale

1. Locate the scale on a firm level surface free from vibrations for accurate weight readings. Adjust the four leveling feet to centre the leveling bubble on the scale.
2. Avoid hot sunshine directly on the scale or near the exhaust port of ventilating system.
3. Please use a separate power source plug, to avoid the disturbance of other electric appliance.
4. There should be no weight on the scale when power is turned on.
5. Commodity should be placed at the centre of platter when being weighed, and its size should not exceed the dimension of the platter.
6. We suggest to warm the scale for 15 ~ 20 minutes before using.。
7. Please note that when  symbol shows up on the display, which means the indicator needs to be recharged. The indicator could only operate for another 6~8 hours. Then "– Lo –" will show on the display and the indicator must be fully charged before operating again.
8. Introduction of Storage Battery

Due to the storage battery adopt the advanced free-maintaining technique, customers need not to replenish electrolyte.
The scale should be recharged every 3 months to prevent failure of the internal rechargeable battery.

1. The battery should be charged for 8~10 hours.
2. The temperature of battery should below 45℃.

Maintaining

1. Please do not discharge with over-current when using the battery. Please charge the battery after discharging current.
2. Please take down the battery when the scale is not used for a long time or break the connection of cathode.
3. Do not short the battery terminals to check whether there is current. Please check whether the connection point is firm to guarantee good connection.
4. The battery should be replaced by specialized person. **No reverse-battery or the product will be damaged.**
   a) Anode of battery should be connected with Anode of product battery（usually red cable）
   b) Cathode of battery should be connected with Cathode of product battery (usually brown cable or black cable)
   c) See the picture following

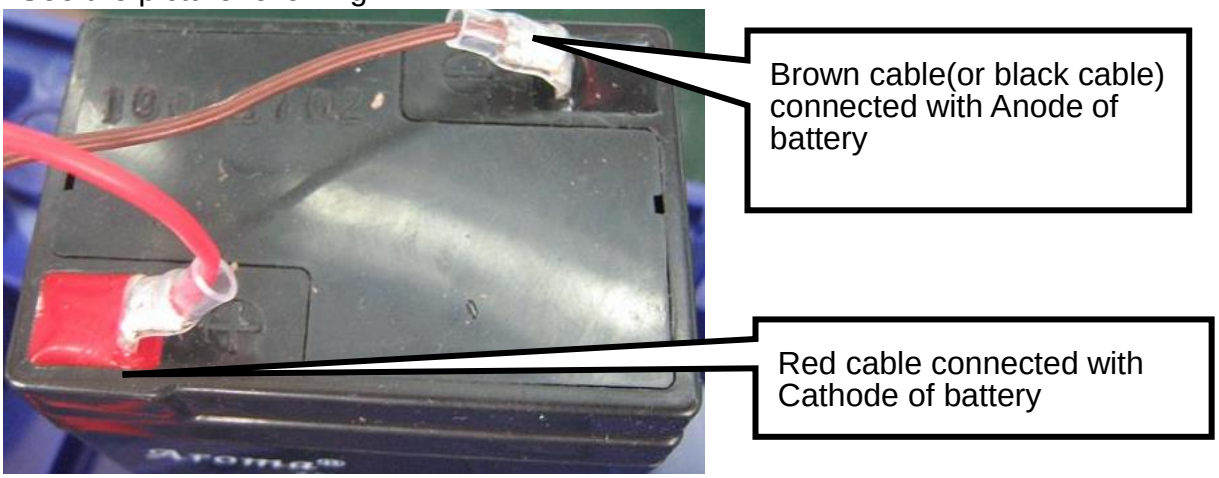

Safety warnings

1. The electrolyte of battery is caustic which causes metal, cotton, etc to corrode.
2. The hydrogen will be resolved when using or charging the battery and it will cause explosion when approaches fire.


No burning


Caution Corrosion


Warning explosion


Children faraway

Quick Setup Calibration

This page is to quickly initiate the scale, for the other functions configuration, you can refer the chapters below.

Instructions:

Step 1 :

- Power off the scale and open the case, find the mini-jumper SWA1 on the main board.
- Switch SWA1 to the ADJ position and then turn the power on. The display will show 01 CSP.

Step 2 :

- Refer to the chapter 3-1 at page 20 to complete **Specification Setting**.

01 CSP

Step 3 :

- Refer to the chapter 3-3 at page 33 to complete **Linearity Calibration**.

03 CLn

Step 4 :

- Refer to the chapter 3-2 at page 30 to complete **Weight Calibration**.

02 CAL

Step 5 :

- When done the initiation, switch the jumper SWA1 back to the LOCK position.

If the jumper SWA1 is switched to the LOCK position during calibration, the machine will exit the service mode automatically.

Chapter 1 Introduction

1-1 Features

- The interface is simple and easy to operate
- Up to 1/15,000 display resolution
- High Speed 24bits AD
- AC / DC switching function (Built-in rechargeable battery)
- Low power indication
- LCD display (Weight-6 digits); Full range tare; Auto zero tracking
- Simple counting; Gross/Net indication; Hold function
- Check mode Lo / Hi / OK with 3 selectable beeping sounds
- Lo / Hi / OK indication shows on LED lights
- Selectable unit: Kilogram (kg) and pound (lb)
- Easily viewing single weight / total weight within 1 button press

Option:

- RS232: Bi-direction transmission, easy data reading or printing
- Sleeve connecting stand

1-2 Specifications

- Display LCD 6 digits, Height 25mm, LED Backlight
- Indicator Dimensions: 235 x 163 x 133 mm (W x H x D)

1-3 Display

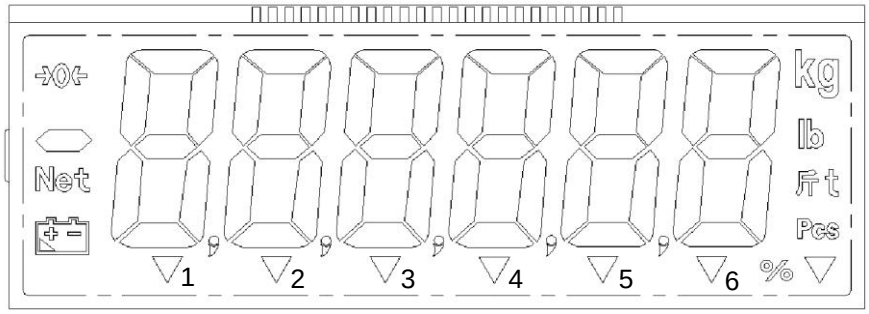

- 7
- **HI**
- **OK**
- **LO**

Icon Introduction

→0←	:	“Zero” indication
▬	:	When the weight is negative, this icon appears.
Net	:	Put container on the platter, after stable and press tare key and the “Net” appears.
	:	“Low battery power” indication
kg	:	“kg” unit
lb	:	“lb” unit
斤	:	“Taiwan Tael“ unit
Pcs	:	Counting mode
%	:	Percent indication
HI	:	The weight is higher than setting value, “HI “LED on
OK	:	When the weight is between HI limit values and LO limits value, “OK “LED on
LO	:	The weight is lower than setting value, “LO “LED on

- ▼ **1** : “STABLE” indication
- ▼ **2** : “GROSS” indication. When the object is in net mode and press F key, this icon appears
- ▼ **3** : “M+” indication
- ▼ **4** : “PT” indication
- ▼ **5** : Range 2
- ▼ **6** : Range 1
- • **7** : When this LED is on, the indicator is charging.

1-4 Keypad Functions Description

key	Function	Hold the key for 1 sec.	Hold the key for 3 sec.
→0←	Zero key	Check Voltage	
↔T	Tare/Pre-tare key	① Backlight setting ② Zero display setting ③ Local G value setting	
UNIT	Unit key		Enter password to enter external weight calibration
F	Function key		
⊙	Print / transmit key	RS-232 transmission setting	

1-5 Power Supply

Power Selection

6V 4Ah / 4V 4Ah rechargeable battery

110V/220V AC/DC Adaptor

Power Consumption

About DC 37.7 mA （System + Load cell+ LED backlight） about 106 hours

LED charging icon

When “- Lo -” shown on the display, the indicator must be charged. When the charging icon becomes red, it means the indicator is charging; when the charging icon becomes green, it means the indicator is fully charged.

The indicator needs to be charged for about 8~9 hours when“- Lo -” shown on the display.

1-6 Error Massage

E 0 ⇒ The EEPROM is not working correctly.
(The EEPROM is not set yet, or the circuit on PCB is broken.)

E 1 ⇒ Zero is higher than the zero range when switching the indicator on.

E 2 ⇒ Zero is lower than the zero range when switching the indicator on.

E 4 ⇒ A/D value is unstable

o F ⇒ ADIC value is over the maximum range. (2097151 ~ -2097152)

o L ⇒ The weight of the object is over 9 divisions of the maximum capacity.

-o L ⇒ The weight of the object is under -1/6 maximum capacity.

Chapter 2 Operating Introduction

2-1 Keypad Operating

[→0←] **:** Zero key

If the weighing value is within the range of zero balance, it can be re-zeroed and tare cancelled.

[↔T] **:** Tare key

It can be tare except when the weight is negative and the maximum capacity.

Tare Function

❶ Place the container onto the scale, until the weight value is stable, press [↔T] key for zero return and the NET indication is shown on the display.

❷ Place the object into the container and the display shows the net weight value of the object.

❸ Remove both object and container, and negative value of the container will show on the display. Press [↔T] again to clear "tare value". The scale returns to zero and NET indication goes off.

- Tare can be continuously done until tare value=maximum capacity
- Continuous Tare ⇒ Press [↔T] key for continuous weight increase/decrease on platter.
- If there is Tare, the pre-tare cannot be done. If there is pre-tare first, and the tare weight Is more than pre-tare weight, Tare can be done.
- No Tare can be done under gross weight display mode.

Pre-Tare Function

When there is nothing on the platter, press [↔T] key and use keypad to input pre-tare weight.
When the cursor flashes on the last digit of display, press [↔T] key again to complete.
Method of clearing Pre-tare value: the same as the method of clearing tare value.
Pre-tare mode, keypad function as followed:

[→0←] ⇒ upward key [F] ⇒ move cursor leftward

[UNIT] ⇒ downward key [↔T] ⇒ move cursor rightward

[F] **:** Function key

❶ In weighing mode, use this key to shift among simple counting function, check weighing function, accumulation function and hold function.

❷ In tare mode, use this key to shift between the "Net value" and the "Gross value".

Shift between Net value and Gross value

- In the Tare mode, the "Net" icon shows up. Press [F] key, the screen displays the "gross weight " and when the "GROSS" icon ▼ shows up ,"Net" icon goes off. Press [F] key again the screen displays the "net weight " and when the "Net" icon shows up , the "GROSS" icon ▼ goes off .
  When the screen displays the "gross weight" (the "GROSS" icon ▼ shows up), keys except the [F] key, have no response.

UNIT ：Unit key

Use UNIT key to select a unit as the display indicated.

- The selected unit will be memorized when you turn the indicator off. And the memorized unit will appear after you turn on the indicator next time.

◎ ：Print key

In accumulation mode, if the parameter set as rnP3 or rnP4 transmission, it transmits the format of simple mode or complete mode.

This key is the combination key. while total counts is shown and weight returns to net zero, press ◎ key to clear data and RS-232 transmits the MC printing format.

- If there is new weight added on platter, a new data will be added to accumulation data. If this weight is not taken off, nothing can be added to accumulation data. Display will show the total counts for one second, then show net weight for one second, then the display returns to the current weight.
- Clear Accumulation data: Press ◎ key and the total counts shows on the display. Press ◎ key again to clear accumulation data.
- Weight must return to net zero if to perform clear function

2-2 Self Test Mode

Press [⊙] key and not release. Then power on the indicator, Wait till display shows 01 AdC to enter "Self-Test Mode".

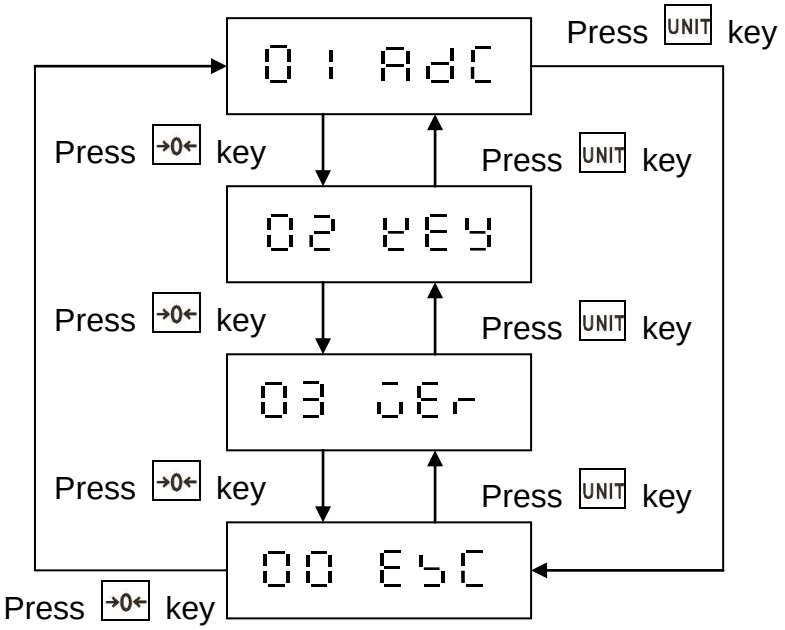

01 AdC INTERNAL VALUE MODE (must hook up full-bridge Load Cell to test)

① Press [↔T] to enter, and the display shows internal value

② Please check the internal value is within normal range（0~400000 no load）。

③ Check whether the backlight is on

④ Press [→0←] key to back to the last screen, the display shows 01 AdC

02 KEY KEYPAD TEST MODE

① Press [↔T] to enter, display shows KEY 01

② Keypad's internal code: [↔T] key = 01、[UNIT] key =31、[⊙] key=20、[F] key=30

③ Press [→0←] key to back to the last screen, the display shows 02 KEY

03 SEr FIRMWARE VERSION DISPLAY MODE

① Press [↔T] to enter, display shows the firmware version 02023

② Press [↔T] key again, the display shows maintenance number 031 for 2 seconds

③ Press [→0←] key to back to the last screen, display shows 03 SEr

00 EXC BACK TO THE LAST SCREEN

Press [↔T] key to exit self-test mode, the scale will re-power on automatically

2-3 General Function Operating

Power on the indicator and enter into the setting that you set before or weighing mode.. Then press F to shift functions.

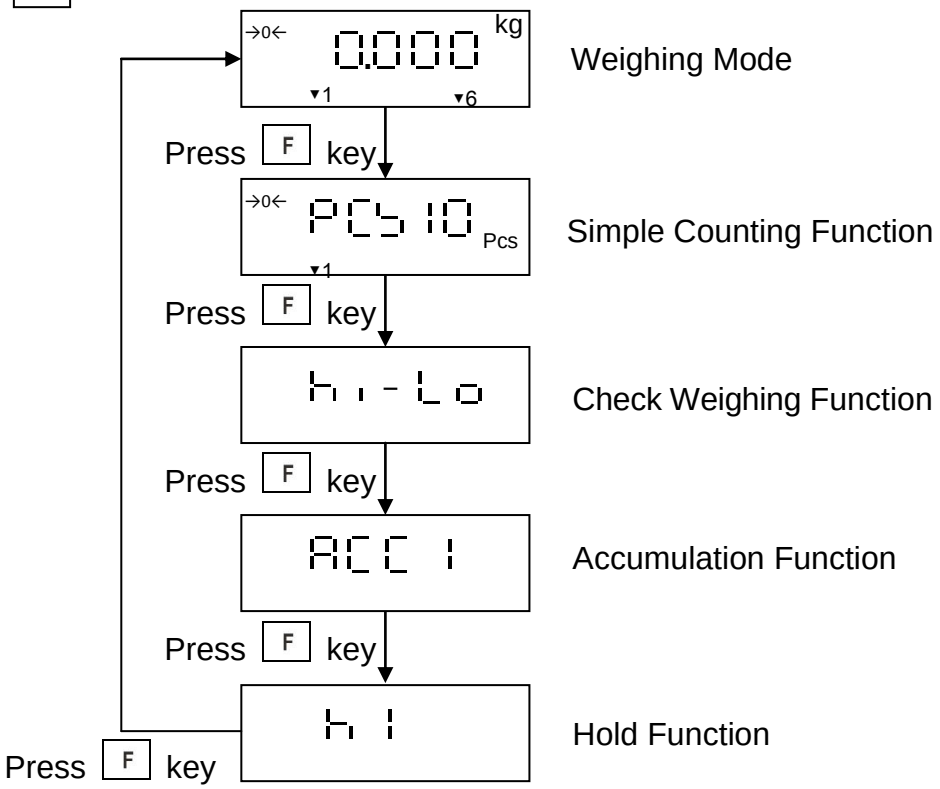

2-3-1 Simple Counting Function

1. In weighing mode, press [F] key to enter into simple counting function.
2. Press [→0←] key to select sample quantity (10, 20, 50, 100, 200)
   LCD shows as right picture:

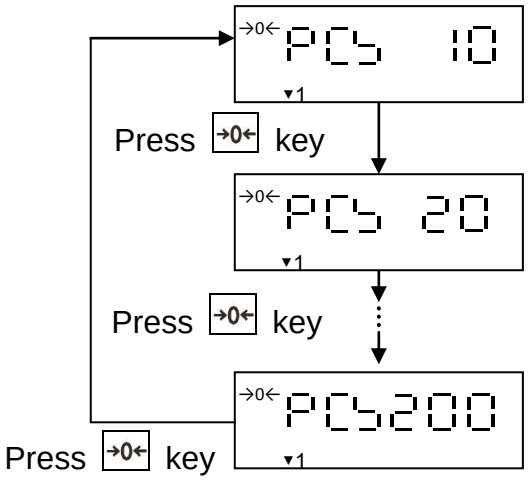

3. Select sample quantity and then place samples on the platter. After stable, press [◎] key and display shows ------. After stable, the scale enters into counting mode and the display shows sample.

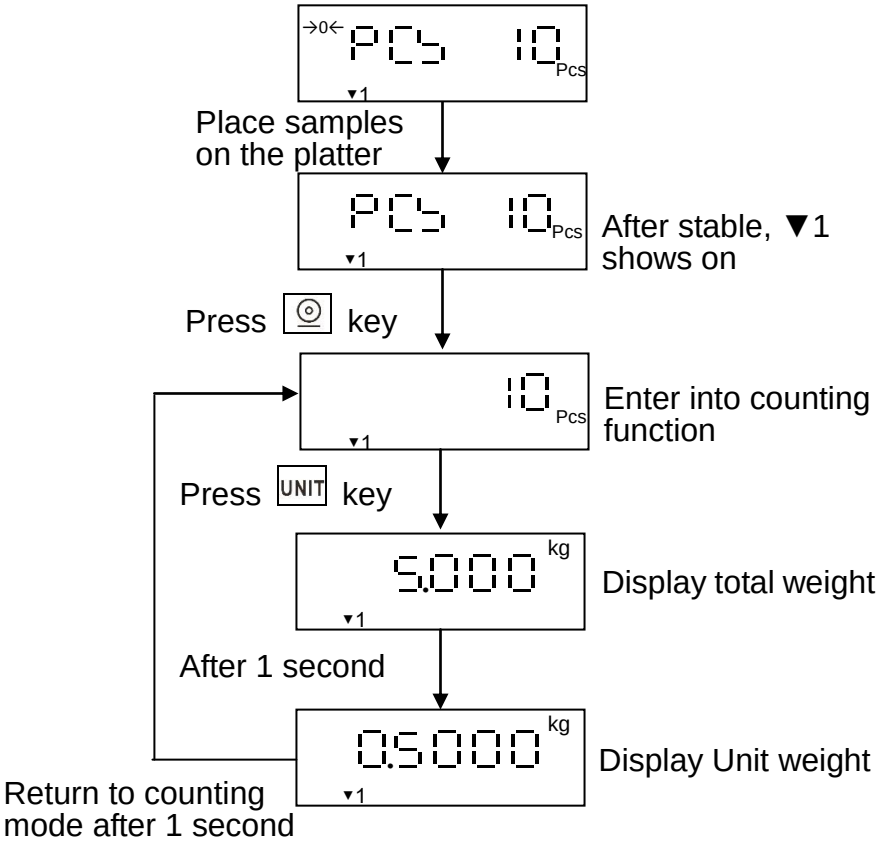

4. Press [F] key to enter into next function.

2-3-2 Check Weighing Function

1. In weighing mode, press [F] key twice to enter into simple counting function.
2. Press [UNIT] key to enter into beeper setting.
   LCD shows as right picture:
3. Press [↔] key to select beep sound.
   b 1 ⇒No beep
   b 2 ⇒OK (when the weight is between Low limit & High limit.), the beeper beeps.
   b 3 ⇒When the weight is under or equal to Low limit & over or equal to High limit, the beeper beeps.

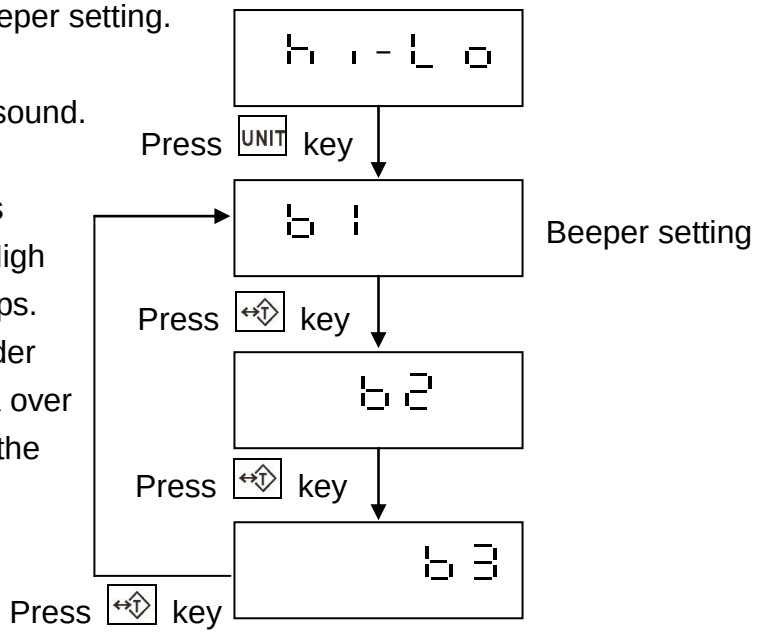

4. Press [UNIT] key to enter into Hi limit value setting
5. [↔] key⇒move cursor to right
   (When the cursor arrive to the last Digit, it returns to the first digit.)
   [→0←] key⇒increase/decrease number
   [UNIT] key⇒confirm and enter into Lo limit value setting
6. In Lo limit value setting
   [UNIT] key⇒confirm and return to Beeper setting

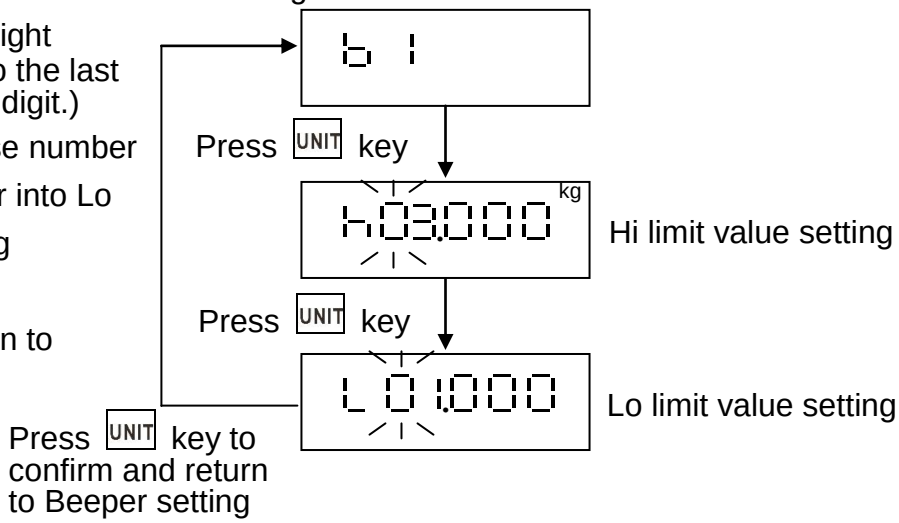

7. In beeper setting, press [◎] key to enter into check weighing function. When the weight is more than 10d and it is unstable, check weighing function open
8. Press [F] key to exit the setting and enter into next function.
   Repeat above steps to set this function again.

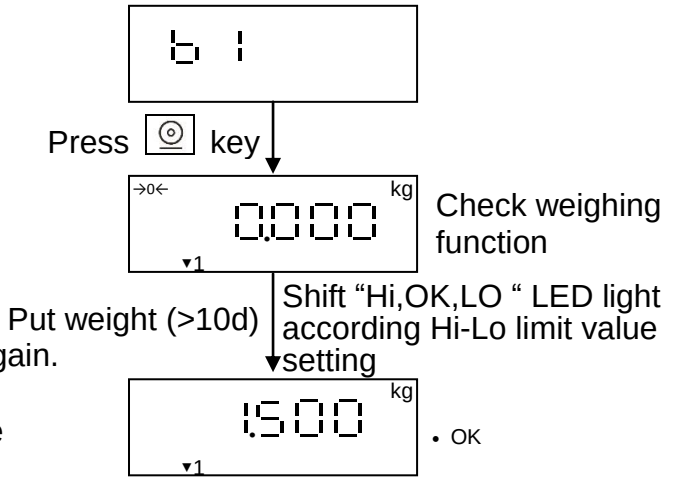

🗐 Units can not be shift in check weighing function. Please enter into weighing mode to shift units

2-3-3 Accumulation Function

1. In weighing mode, press F key three times to enter into accumulation function. LCD shows as following picture:

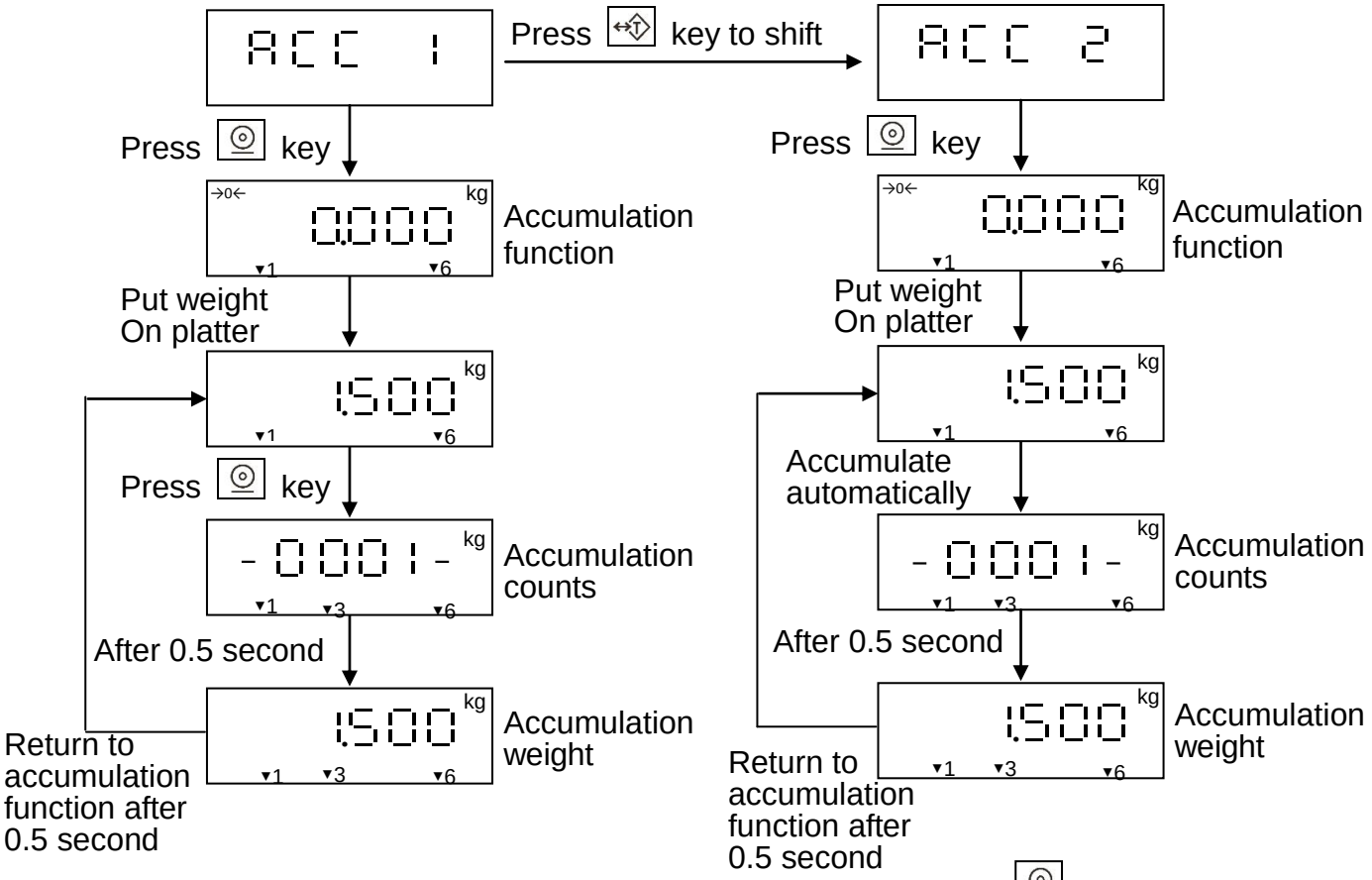

ACC1 ⇒Manual accumulation: After the weight is stable, press key to accumulate and "M+" icon ▼ shows up. It does the second accumulation, after the weight returns to zero.

ACC2 ⇒Automatic accumulation: After the weight is stable, it accumulates automatically, and "M+" icon ▼ shows up. It does the second accumulation, after the weight returns to zero.

If it set as rnP3, rnP4 or rnP5 transmission mode, RS-232 outputs printing format while accumulating.

The Minimum weight of accumulation: > 10d

2. Press key to see accumulation counts and accumulation weight.

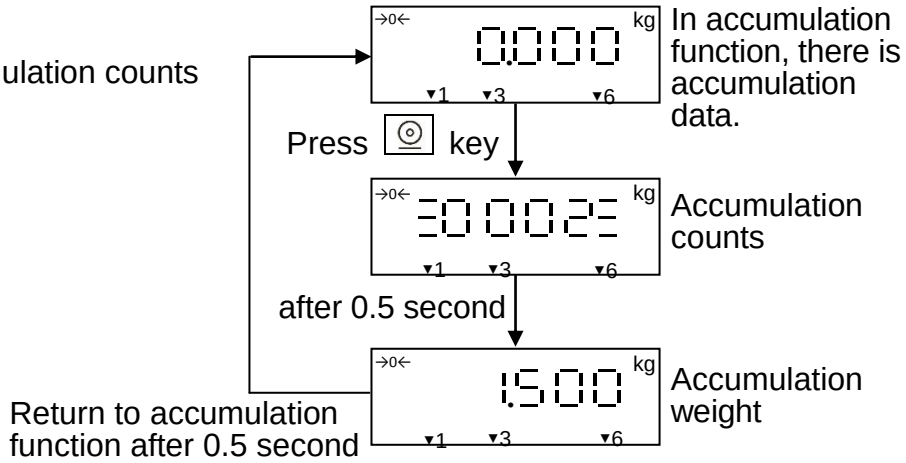

3. Clear accumulation data:
   When there is no weight on the platter,
   press [◎] key to display accumulation counts.
   Then press [◎] key again to clear the data.
   "M+" icon ▼ goes off.

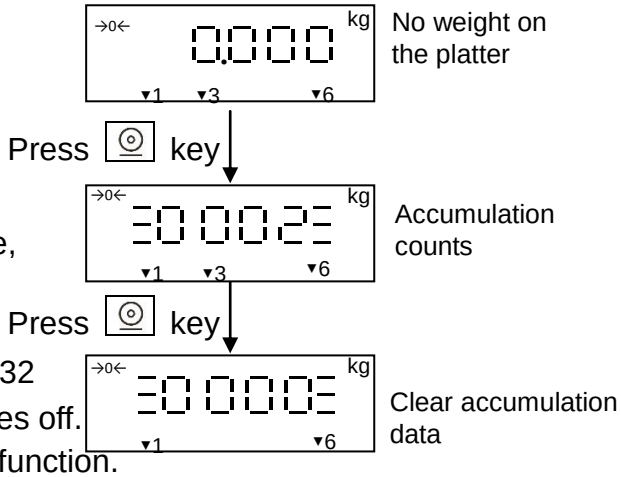

🗐 If it set as rnP3 or rnP4 transmission mode, RS-232 outputs MC printing format after data clear.

🗐 Press [→0←] key for 2 seconds and the beeper beeps 3 times. The accumulation data is cleared and RS-232 does not output MC printing format. "M+" icon ▼ goes off.

4. Press [F] key to exit the setting and enter into next function.
   The original accumulation data still exist.

2-3-4 Hold Function

1. In weighing mode, press [F] key four times to enter into hold function.
2. Use [↔T] key to select h1, h2 or h3
   Then press [◎] key to enter into Hold function.
   When the weight is fixed, the beeper beeps.
   h1 ⇒The weight is unlocked only after taking off the weight and the weight returns to zero.
   h2 ⇒The weight is unlocked, when increase or decrease the weight that is beyond the tolerance d.
   h3 ⇒ Calculate the average weight and fixed the display. To unlock it, press [→0←] key to re-read the weight.

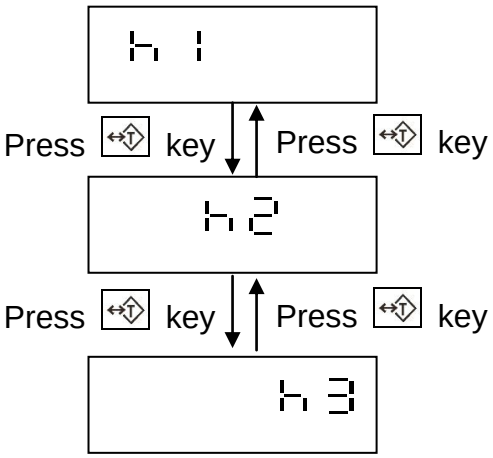

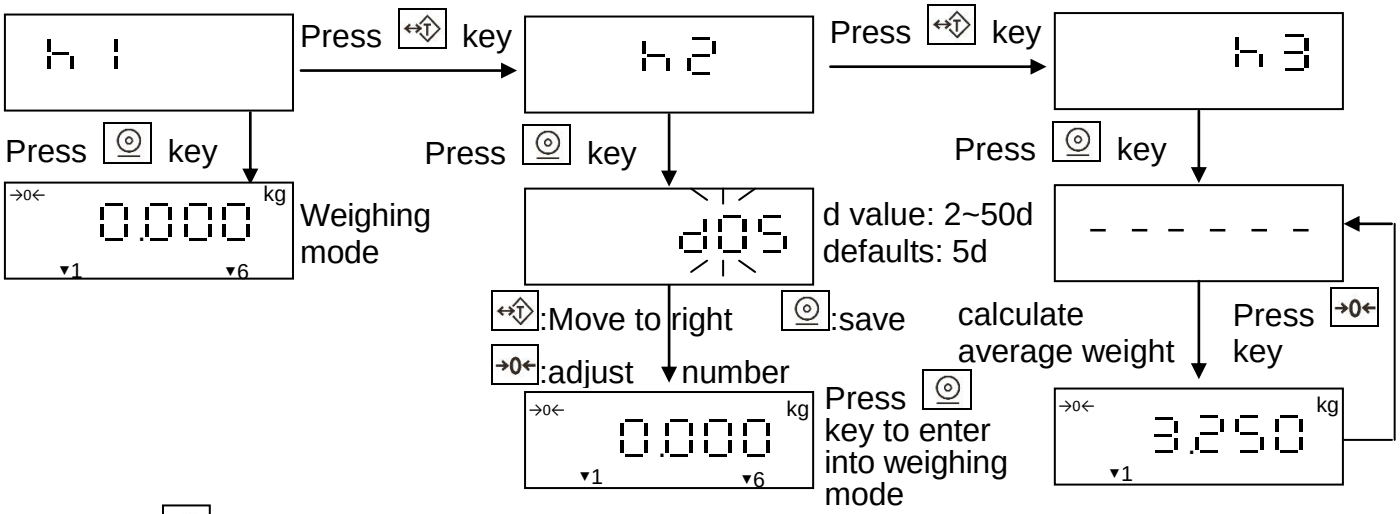

3. Press [F] key to exit the setting and enter into next function.

🗐 Repeat above steps to set this function again.

2-4 Further Function Operating

2-4-1 General Setting

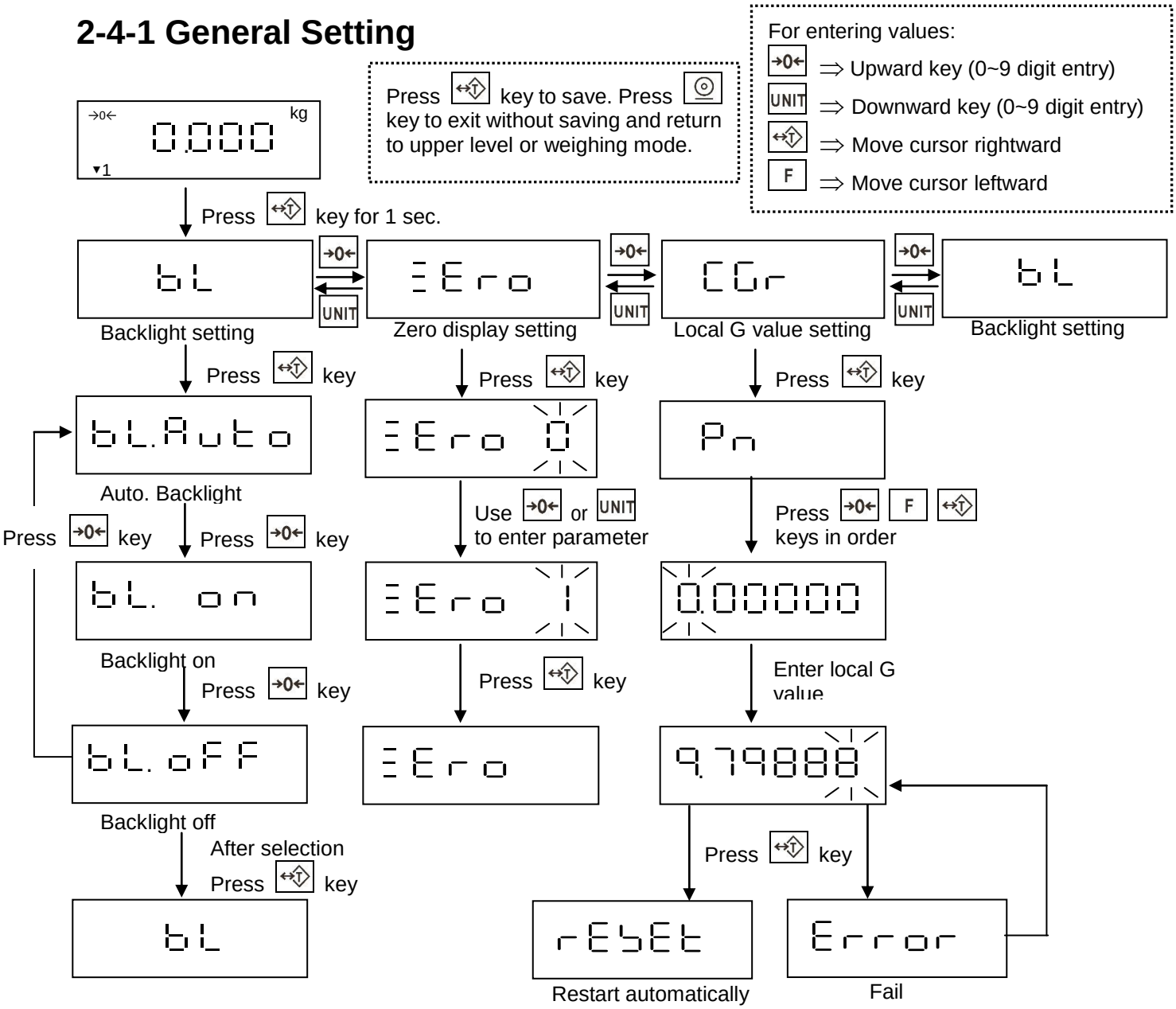

- Zero display setting: 0~9, when the weight is within +/- of the set values, it display as zero.
- Local G value conditions: The new Local G values must be within ±10% of the Local G value set in the factory.
- If the external weight calibration has been used, the Local G value is disable.
- To enable it, please switch the jumper SWA1 to ADJ position first. Then do Weight Calibration Setting CAL 01 (See 3-2-1).

2-4-2 Check Voltage

In weighing mode and the weight returns to zero,

Press →0← key for 1 second to check voltage.

It returns to weighing mode after 3 second.

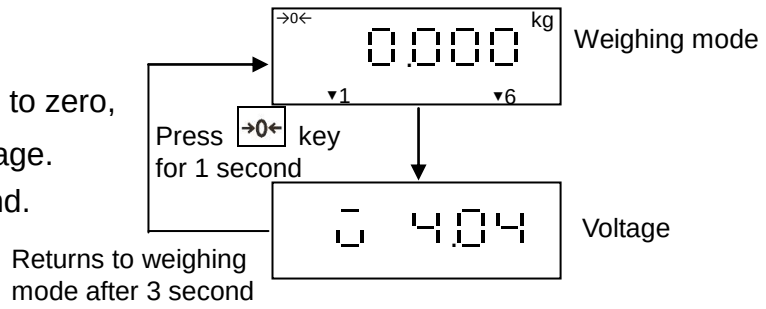

2-4-3 External Weight Calibration

In weighing mode and the weight returns to zero, Press UNIT key for 3 second to enter into password display. Press ◎ ↔T →0← keys in order and enter into External Weight Calibration. Otherwise it will returns to weighing mode.

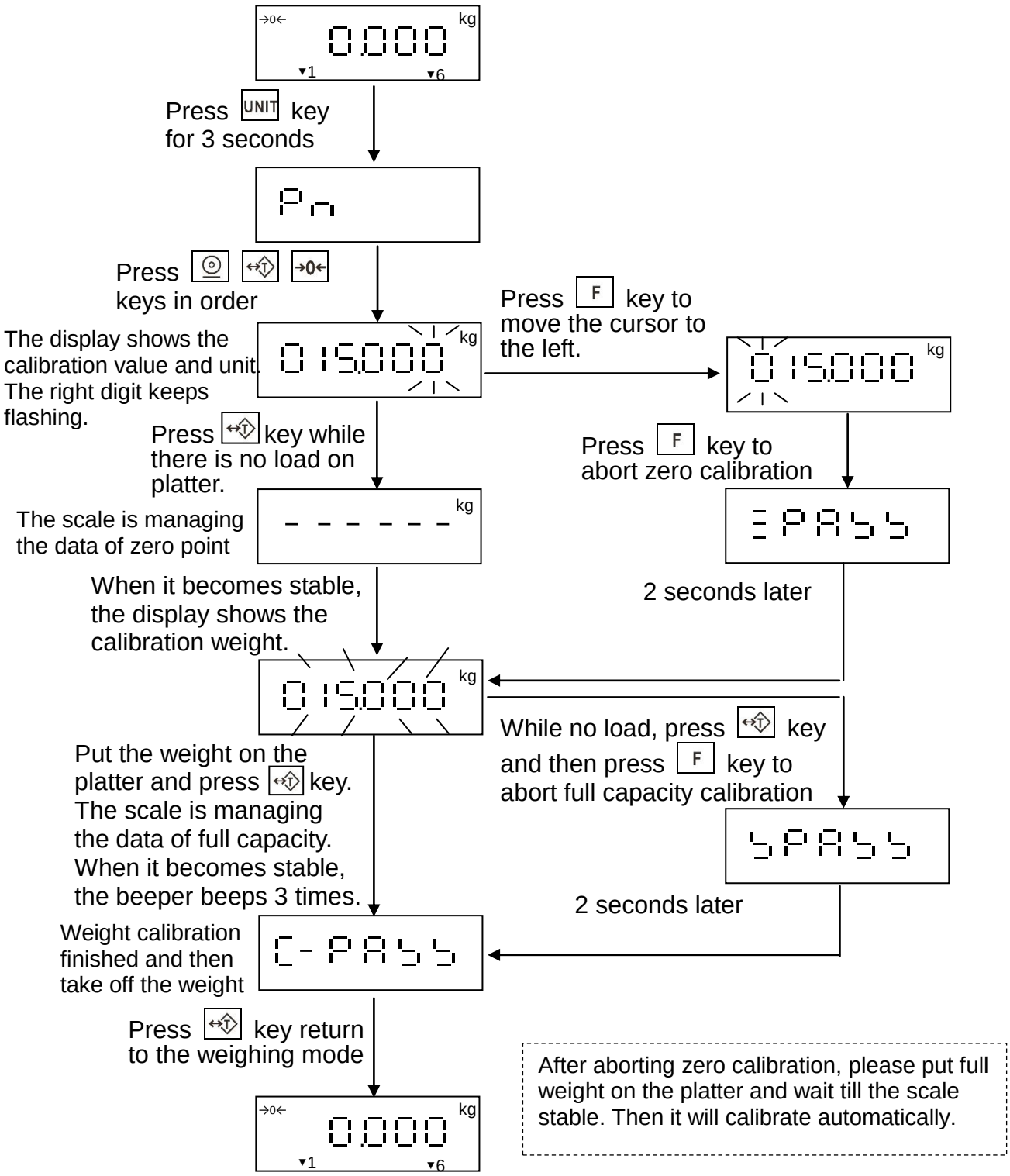

Weight calibration conditions:
The calibration weight value placed on the platter must be over 100e, and the standard deviation of the weight must be within ±10%.

2-4-4 Transmission Setting

1. In weighing mode, press key for 1 second to enter into transmission setting.

2. Press key to select transmission

rnP0 ⇒No transmission

rnP 1 ⇒Stable transmission

rnP2 ⇒Continuous transmission

rnP3 ⇒Press key to transmit (Simple mode)

rnP4 ⇒Press key to transmit (Complete mode)

rnP5 ⇒ Stable transmission The format is as same as rnP 3

3. Press key to set baud rate (1200, 2400, 4800, 9600 or 19200.)

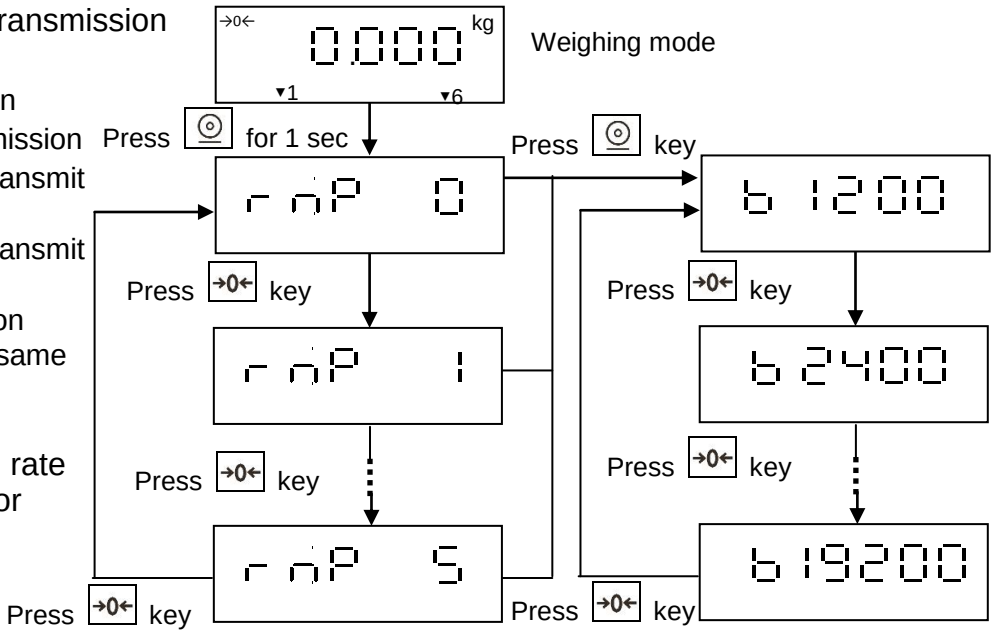

4. Press key to save the setting and return to weighing mode

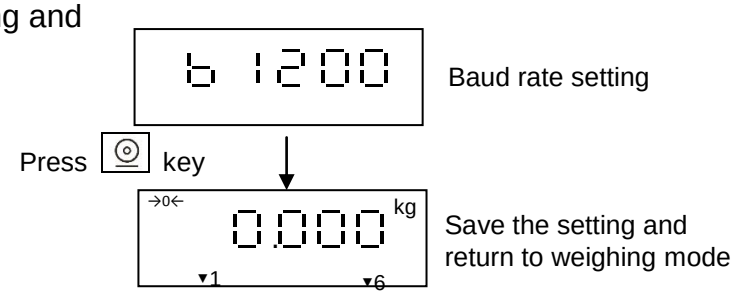

RS-232 Output Format

The output format of rnP 1 and rnP 2

GROSS	S	T	,	G	S	,	+	1	2	3	4	5	6	7	SP	SP	o	z	CR	LF
Net	S	T	,	N	T	,	+	.	2	3	.	4	5	6	t	l	.	g		
Plus OL	O	L	,	G	S	,	+	SP	SP	SP	SP	SP	SP	SP	SP	SP	SP	SP		
Minus OL	O	L	,	G	S	,	-	SP	SP	SP	SP	SP	SP	SP	SP	SP	SP	SP		
Unstable	U	S	,	G	S	,	+	1	2	3	4	.	5	6	SP	SP	l	b		

rnP 1 ⇒Stable transmission：when the weight is more than 10d and the weight is stable, it transmit above format. It transmits next data format only when take off the weight on the platter and put it on again.

rnP 2 ⇒Continuous transmission：It always transmit above format.
Output rate: 4counts / second

rmP 3 ⇒Press key to transmit (simple mode)：use in accumulation mode.

Steps: 1. Press F key and select ACC 1. Press key to enter into weighing mode.

2. Select rmP 3 and necessary baud rate.

3. Put the objects on the platter. After the weight stable, press key to accumulate the data and print out the order and the net value of the data as following example.

4. Repeat above step to accumulate and print continuously.

5. Press key twice to print TOTAL as following example and clear the data.

S/N	WT	
0001	2.500	☜ Press key
0002	2.500	☜ Press key
0003	2.500	☜ Press key
0003	7.500	☜ Press key twice to print TOTAL

rmP 4 ⇒Press key to transmit (complete mode)：use in accumulation mode.

Steps: 1. Press F key and select ACC 1. Press key to enter into weighing mode.

2. Select rmP 4 and necessary baud rate.

3. Put the objects on the platter. After the weight stable, press key to accumulate the data and print out the data as following example.

TICKET NO. 0001
GS 2.500kg
TR 0.000kg
NT 2.500kg ☜ Press key

4. Repeat above step to accumulate and record.

5. Press key twice to print TOTAL as following example and clear the data.

TOTAL NUMBER
OF TICKETS 0003
TOTAL WEIGHT
2.500kg ☜ Press key twice to print TOTAL

rmP 5 ⇒Stable transmission (the format is as same as rmP 3) in accumulation mode.

Steps: 1. Press F key and select ACC 2. Press key to enter into weighing mode.

2. Select rmP 5 and necessary baud rate.

3. Put the objects on the platter. After the weight stable, it automatically accumulates the data and print out the order and the net value of the data as following example.

4. Repeat above step to record and print continuously.

5. Press key twice to print TOTAL as following example and clear the data.

Chapter 3 Service Mode Access

- Open the case, and then switch the mini-jumper SWA1 on the main board to the ADJ position. Turn the power on. The display shows 01 CSP.
- When finished, set the jumper SWA1 back to the LOCK position.
- If the jumper SWA1 is returned to the LOCK position during calibration, the scale exits the service mode automatically.

The Service Mode Access contains 5 settings as below:

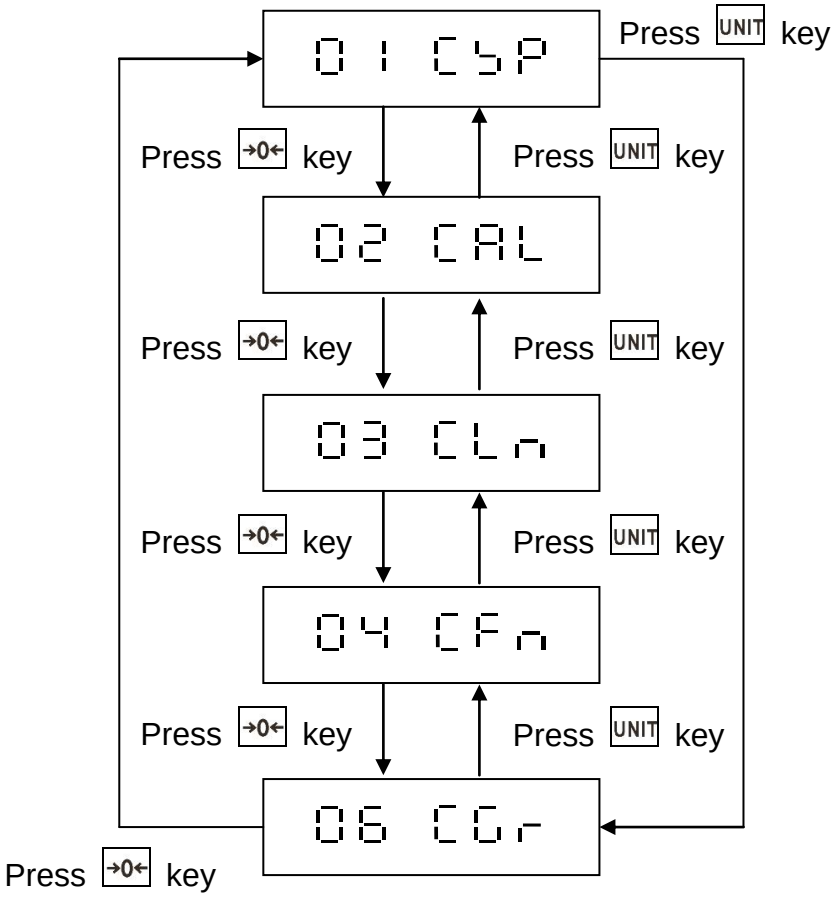

01	CSP	⇒ Specification Setting
02	CAL	⇒ Weighing Calibration
03	CLn	⇒ Linearity Calibration
04	CFn	⇒ Function Setting
06	CGr	⇒ Local G Value Setting

3-1 Specification Setting 01 CSP

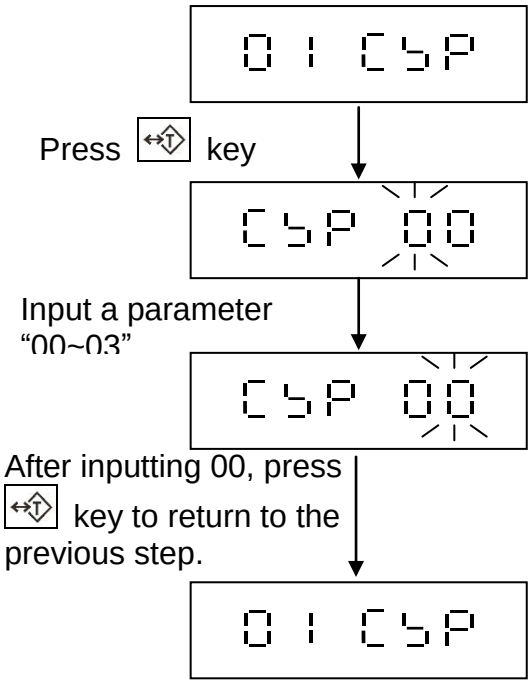

→0← ⇒ Upward key (0~9 digit entry)
UNIT ⇒ Downward key (0~9 digit entry)
⇒ Move cursor rightward
F ⇒ Move cursor leftward

CSP 00 ⇒ Return to the previous step
CSP 01 ⇒ Weight Units Setting
CSP 02 ⇒ Customised Weight Units Setting
CSP 03 ⇒ Multi-segment Setting

3-1-1 Weight Unit Setting CSP 01

- There is no resolution limitation when the weight units “kg, g, lb, lb/oz” are selected.
- The weight units”oz, GN, dwt, and ct” are only available on indicators with less 1/10,000 external resolution.

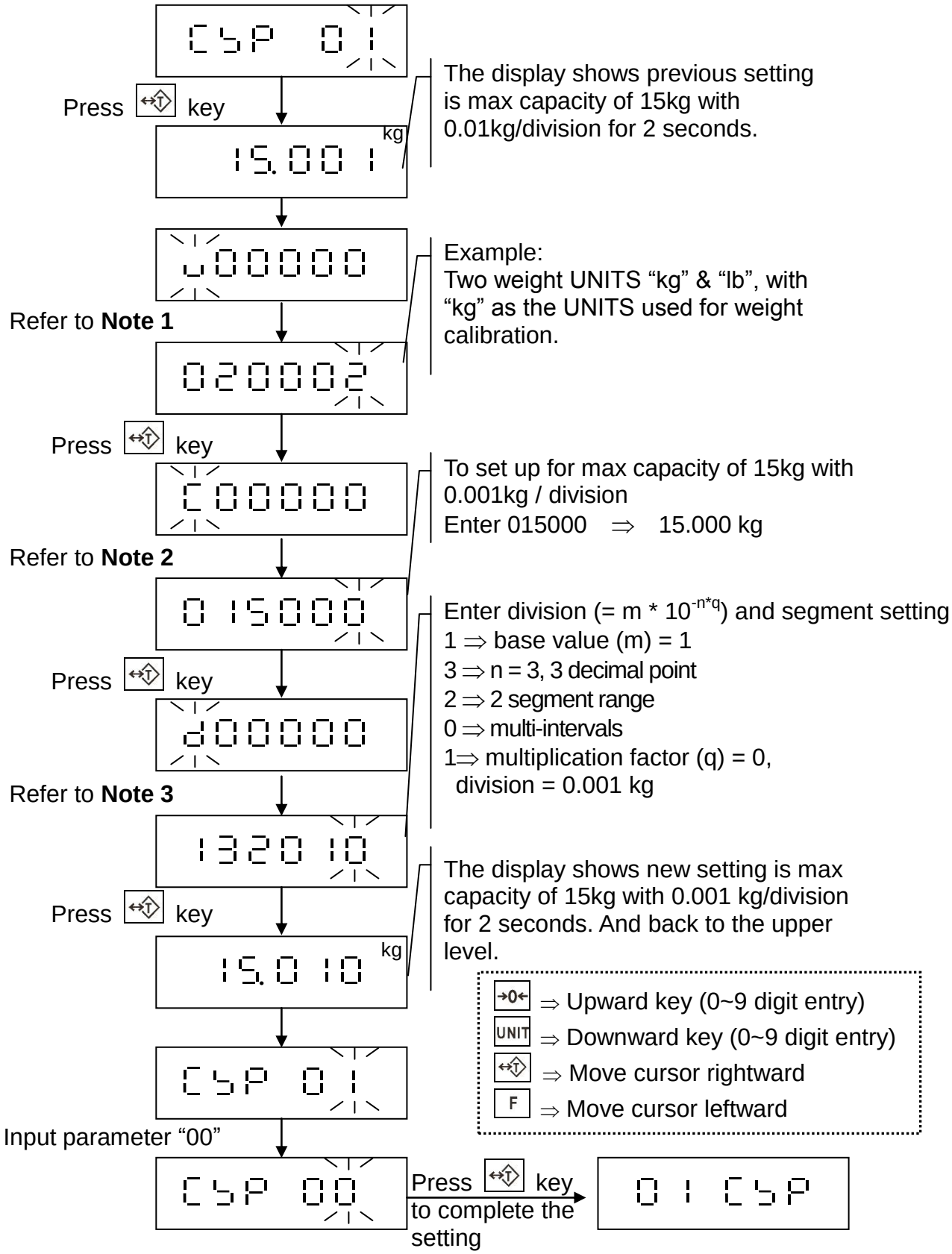

Note 1

The users can set up the different weight units in various orders according to their preference, and the amount of the chosen weight units can be up to 5

u 0 0 0 0 0

(a)(b)(c) (d)(e) (f)

(a) ⇒ The first weight unit (only “kg”, “g”, or “lb” are available to choose from. Please select one of the parameters 0, 1, or 2)

(b) ⇒ The second weight unit (select one of the parameters described below)

(c) ⇒ The third weight unit (select one of the parameters described below)

(d) ⇒ The fourth weight unit (select one of the parameters described below)

(e) ⇒ The fifth weight unit (select one of the parameters described below)

(f) ⇒ The amount of the weight units selected (select one of parameters 1 ~ 2)

The description of the parameters

0⇒ kg (Decimal system)	5 ⇒ Reserved
1⇒ g (Decimal system)	6 ⇒ Reserved
2⇒ lb (Decimal system)	7 ⇒ Reserved
3 ⇒ Reserved	8 ⇒ Reserved
4 ⇒ Reserved	9 ⇒ Reserved

For example:

Choose “kg” & “lb” (two weight units). NOTE the scale is calibrated using “kg” weights and key in 020002

Note 2 Enter the maximum capacity of the scale, total 6 digits (not including 9d)

C 0 0 0 0 0

(g) (h) (i) (j) (k) (l)

For example:

15.000 kg ⇒ key in 015000

1500.0 g ⇒ key in 015000

6.000 lb ⇒ key in 006000

Note 3 Set the minimum division and decimal point position to determine the display resolution

d 0 0 0 0 0

(m) (n) (o) (p) (q)

Division = m * 10^{-n*q}, m = base value, n = numbers of decimal point, q = multiplication factor

(m) ⇒ Division base value, select 1, 2, or 5

(n) ⇒ The number of decimal places (0 ~ 5)

For example:

15.000 kg ⇒ enter 3, 1500.0 g ⇒ enter 1, 6.000 lb ⇒ enter 3

(o) ⇒ range setting (select one of parameters 0, 1, 2, or 3)

For example:

0, 1 ⇒ full segment range,

2 ⇒ 2 segment range (divided at 1/2 of the full scale),

3 ⇒ 3 segment range (divided at 1/6 of the full scale & 2/3 of the full scale)

(p) ⇒ 0 : multi-interval 1 : multi-range

Multi interval: Multiple segment range and each segment with its own minimum and maximum capacity and scale interval. The selection of the appropriate weighing segment is determined automatically according to the load applied, both on increasing and decreasing loads.

Multi range: Similar to Multi-interval, but the scale interval unchanged when unloading until weight return to zero

2 Segment range:

Multi interval

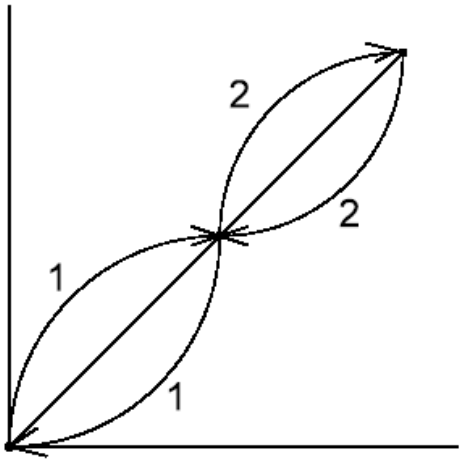

Multi range

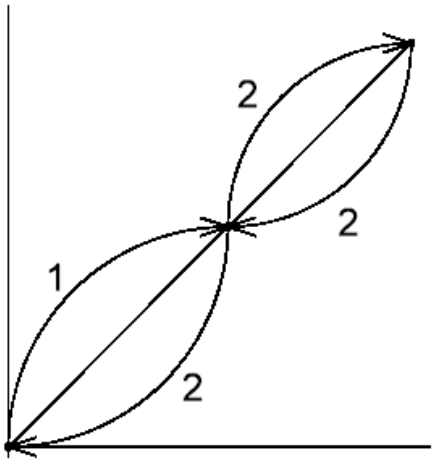

3 Segment range:

Multi interval

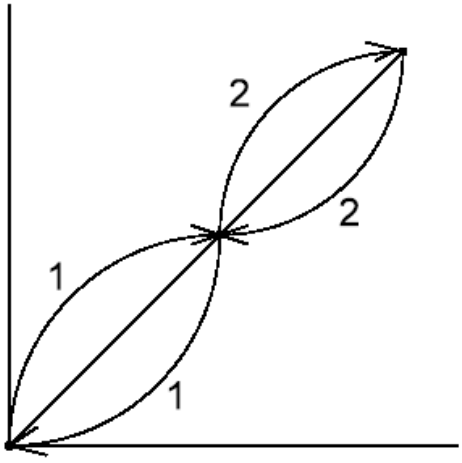

Multi range

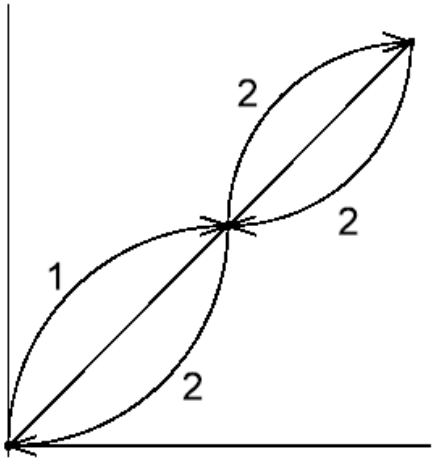

(q) ⇒ Division multiplication factor: (Only one Weight UNITS Model is available)
0 ⇒ no factor 1 ⇒ base value X 10

Division Table for various m and q values:

(m) = 1	(m) = 2	(m) = 5	(m) = 1	(m) = 2	(m) = 5
(q) = 0			(q) = 1		
1	2	5	10	20	50

🗐 If 2 segment range and multi-interval is set, tare automatically cancels out after weight is cleared.

3-1-2 Customized Capacity Setting CSP 02

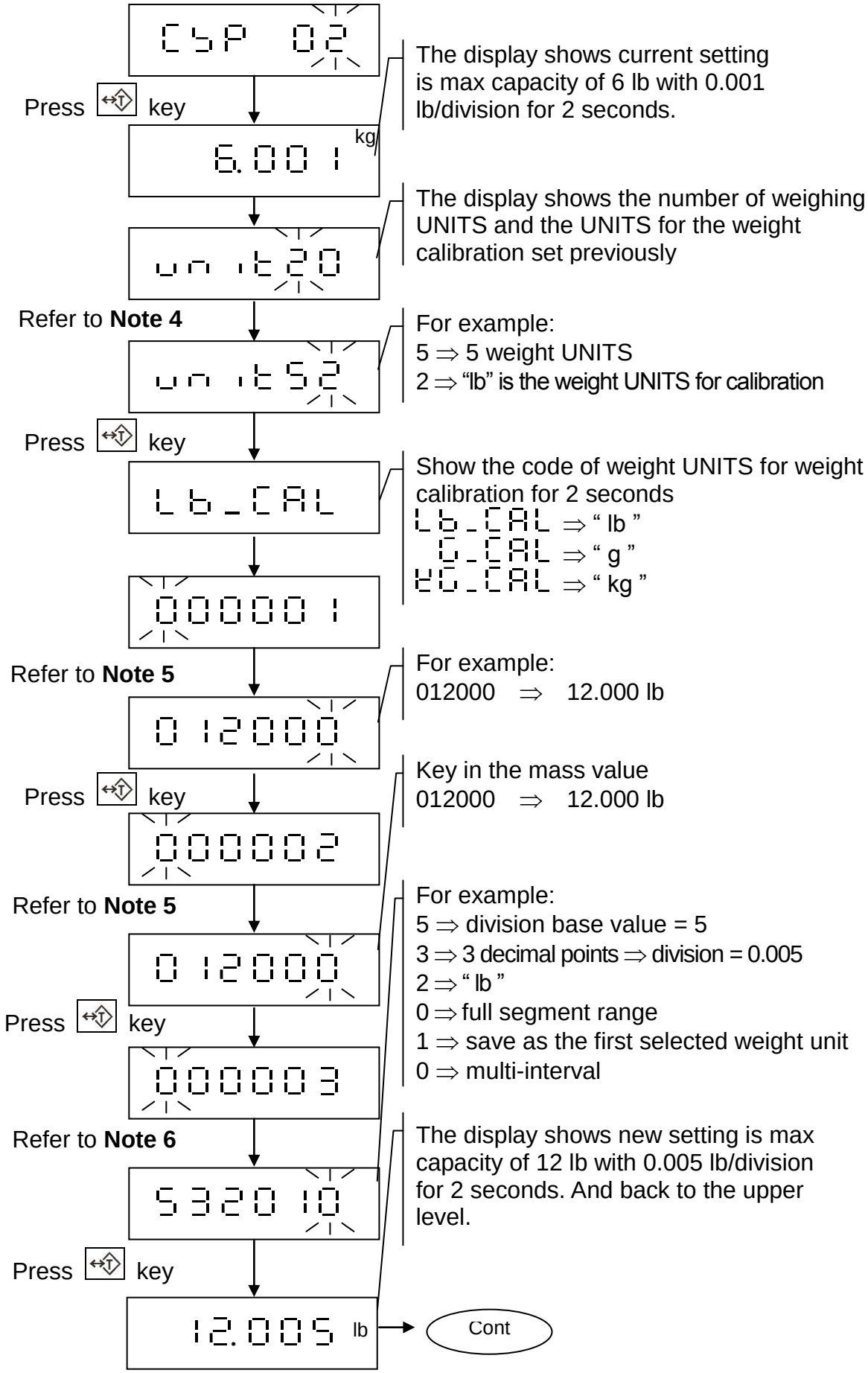

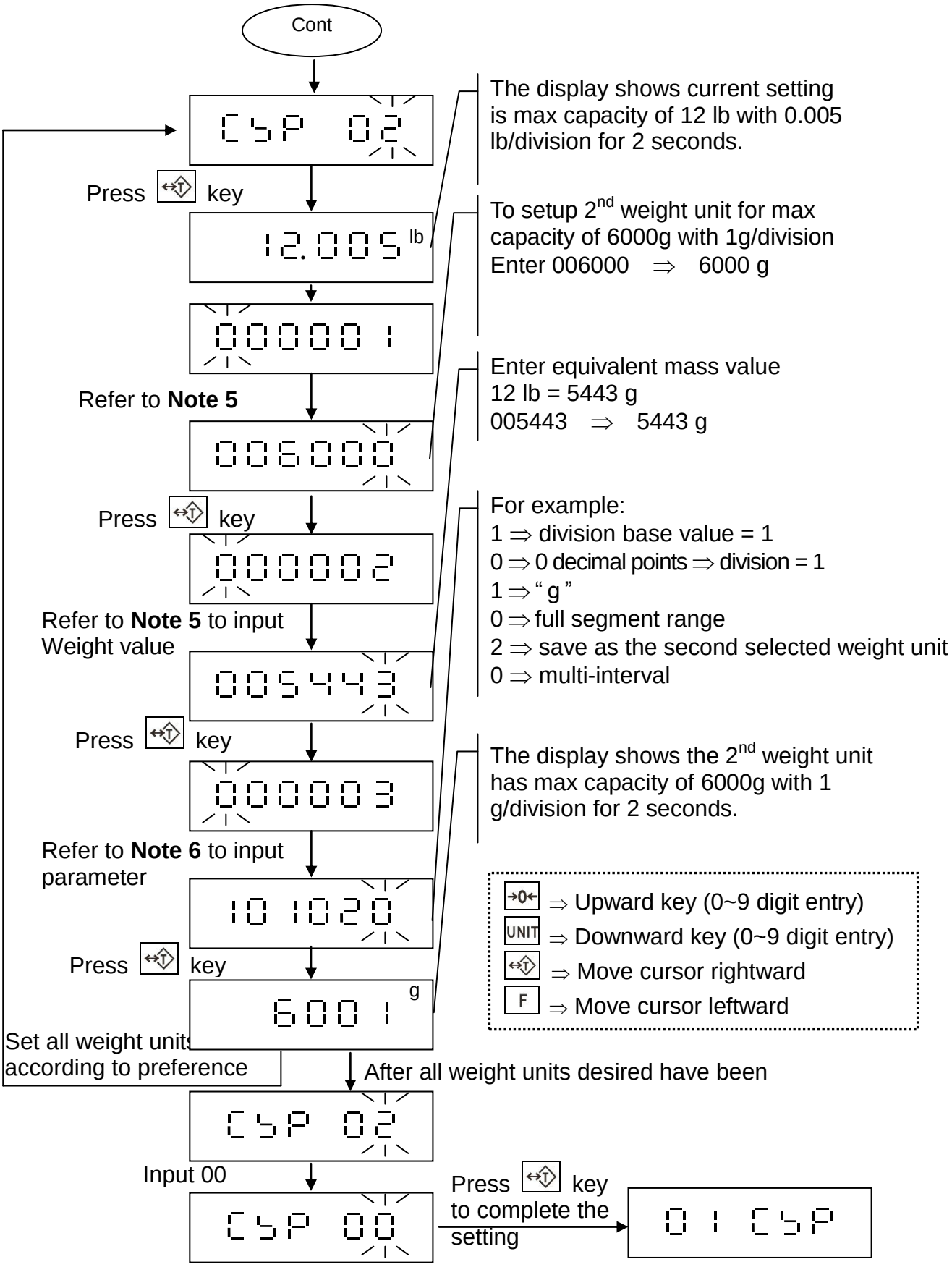
Cont
CSP 02
Press key
12.005 lb
000001
Refer to **Note 5**
006000
Press key
000002
Refer to **Note 5** to input Weight value
005443
Press key
000003
Refer to **Note 6** to input parameter
10 1020
Press key
6001 g
Set all weight units according to preference
After all weight units desired have been
CSP 02
Input 00
CSP 00
Press key to complete the setting
01 CSP
The display shows current setting is max capacity of 12 lb with 0.005 lb/division for 2 seconds.
To setup 2nd weight unit for max capacity of 6000g with 1g/division
Enter 006000 ⇒ 6000 g
Enter equivalent mass value
12 lb = 5443 g
005443 ⇒ 5443 g
For example:
1 ⇒ division base value = 1
0 ⇒ 0 decimal points ⇒ division = 1
1 ⇒ " g "
0 ⇒ full segment range
2 ⇒ save as the second selected weight unit
0 ⇒ multi-interval
The display shows the 2nd weight unit has max capacity of 6000g with 1 g/division for 2 seconds.
→0← ⇒ Upward key (0~9 digit entry)
UNIT ⇒ Downward key (0~9 digit entry)
⇒ Move cursor rightward
F ⇒ Move cursor leftward

Note 4

un it 00

(a) (b)

(a) ⇒ The number of the weight units (Max: 5, key in 1 ~ 5)
(b) ⇒ The weight unit for weight calibration (choose from “kg”, “g”, “lb”, key in 0, 1, or 2)

Parameter description:
0 ⇒ kg , 1 ⇒ g , 2 ⇒ lb

Note 5

000001 000002

(c) (d) (e) (f) (g) (h) (i) (j) (k) (l) (m) (n)

c ~ h set the maximum capacity (6 digits)
i ~ n set the mass value for weight calibration (6 digits)
The maximum capacity needs to be presented based on the decimal system, and the first unit must be the calibration unit.

For example:
How to calculate the maximum capacity and the mass value based on the different types of weight unit.

A. Choose “kg” as the weight unit for the weight calibration

① The first weight unit setting: 6.000 kg / 0.002 kg
⇒ Enter the maximum capacity 006000 at (c) ~ (h)
⇒ Enter the mass value 006000 at (i) ~ (n)

② Unit “lb” (hexadecimal notation system)
Calibration weight is 6kg. 0.001 kg = 0.002204623 lb
6 kg = 6×2.204623 (lb) = 13.227738 lb. Take 12 lb as the max capacity
12._0.00 lb / 0.08 oz (minimum division=8, decimal point position=2)
12 lb ×16 (oz) = 192.00 oz ⇒ Enter the maximum capacity 019200 at (c) ~ (h)
13.227738 lb ×16 (oz) = 211.64 oz ⇒ Enter the mass value 021164 at (i) ~ (n)

B. Choose “lb” as the weight unit for the weight calibration

① The first weight unit setting: 12.000 lb / 0.005 lb (the maximum Capacity / division)
⇒ Enter the maximum capacity 012000 at (c) ~ (h)
⇒ Enter the mass value 012000 at (i) ~ (n)

② The second weight unit setting “g”
0.002204623 lb = 1 g
12 lb = 5443 g. Take 6000 g as the maximum capacity
6000 g / 2 g (the maximum Capacity / division),
⇒ Enter the maximum capacity 006000 at (c) ~ (h)
⇒ Enter the mass value 005443 at (i) ~ (n)

Note 6

0 0 0 0 0 3

(o) (p) (q) (r) (s) (t)

(o) ⇒ Minimum division setting
Parameter description:
Decimal system: Input 1, 2, or 5 as the minimum division for the weight value
Hexadecimal system: Input 1, 2, 4, or 8 as the minimum division for the weight value

(p) ⇒ Decimal point position
Parameter description:

Decimal system:
0 ⇒ 0 1 ⇒ 0.0
2 ⇒ 0.00 3 ⇒ 0.000
4 ⇒ 0.0000 5 ⇒ 0.00000

Hexadecimal notation system:
0 ⇒ 0._0 1 ⇒ 0._0.0
2 ⇒ 0._0.00 3 ⇒ 0._0.000

(q) ⇒ Weight unit displayed

Parameter	0	1	2
Unit	kg	g	lb
Notation system	10	10	10
symbol	kg	g	lb

(r) ⇒ Scale change point (Input the parameter 0, 1, 2, or 3)
Parameter: 0 ⇒ full range 1 ⇒ full range 2 ⇒ dual range (changes at 1/2 of full scale)
3 ⇒ triple range (changes at 1/6 of full scale and 2/3 of full scale)

(s) ⇒ Save the weight units at preferred slots (no more than the number of set weight units)
Parameter: 1 ⇒ the first slot (the weight calibration unit) 2 ⇒ the second slot
3 ⇒ the third slot 4 ⇒ the fourth slot 5 ⇒ the fifth slot

(t) ⇒ 0: multi-interval 1: multi-range

Customized Capacity Setting- How to Revise

CAP 02

The display shows current setting is max capacity of 12 lb with 0.005 lb/division for 2 seconds.

Press [→T] key

12.005 lb

Display shows parameter settings from last time.

unit 52

For example:
5 ⇒ 5 weight UNITS are used
2 ⇒ "lb" as weight calibration unit

Refer to **Note 4** input the parameters or do nothing

unit 52

Display shows weight calibration UNITS for 2 seconds:
Lb_CAL ⇒ " lb " calibration
G_CAL ⇒ " g " calibration
KG_CAL ⇒ " kg " calibration

Press [→T] key

Lb_CAL

For example:
019200 ⇒ 192.00 oz

000001

Please enter weight calibration value in proper UNITS value. For example:
12 lb = 192 oz
019200 ⇒ 192.00 oz

Refer to **Note 5** to input parameters

019200

For example:
5 ⇒ division base value = 5
2 ⇒ 2 decimal points ⇒ division = 0.05 and display as 0._0.05
4 ⇒ "lb-oz "
0 ⇒ full segment range
3 ⇒ save into third UNITS slot
0 ⇒ multi-interval

Press [→T] key

000002

Refer to **Note 5** to input Weight value

019200

The display shows the 3rd weight unit has max capacity of 12 lb with 0.05 oz/division for 2 seconds, and it returns to last screen

Press [→T] key

000003

[→0←] ⇒ Upward key (0~9 digit entry)
[UNIT] ⇒ Downward key (0~9 digit entry)
[→T] ⇒ Move cursor rightward
[F] ⇒ Move cursor leftward

Refer to **Note 6** to input parameters

524030

Press [→T] key

12._0.05 lb → CAP 02 → Continue to do another weight unit revision, or exit customized capacity

3-1-3 Multi-range Setting CSP 03

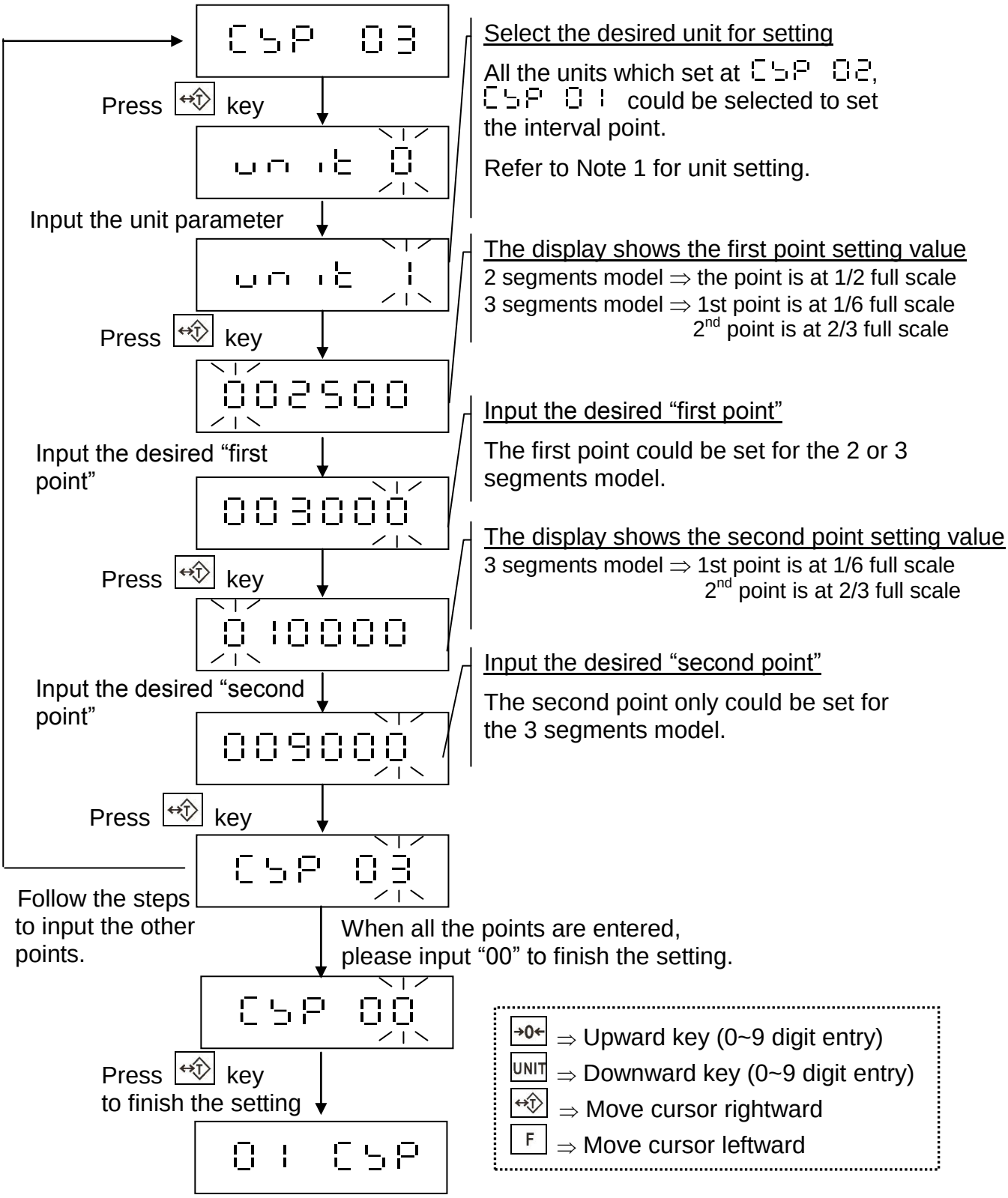

- By the specification setting of CSP 02, CSP 01, the default separation points for the 2 segments model is 1/2 full scale, and 1/6 full scale and 2/3 full scale for the 3 segments model. To change the interval point setting, please use the CSP 03 function.
- When the specification settings of CSP 02 and CSP 01 have been changed, the separation points would be reset to the default setting.

3-2 Weight Calibration 02 CAL

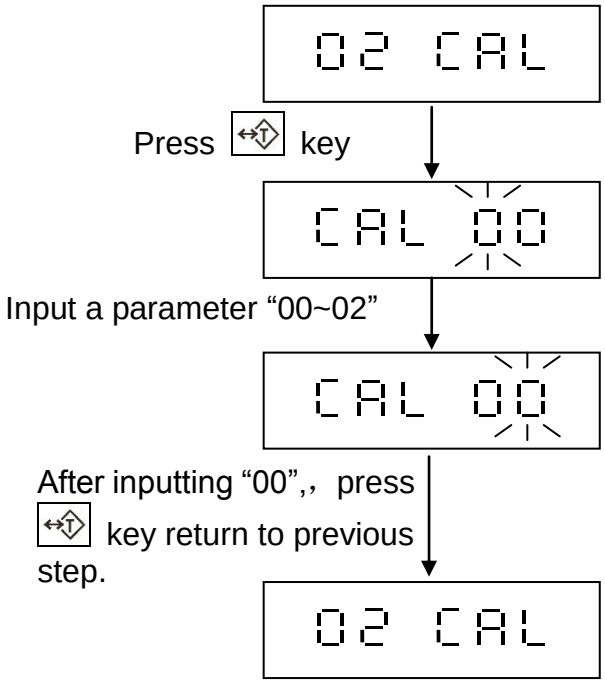

→0← ⇒ Upward key (0~9 digit entry)
UNIT ⇒ Downward key (0~9 digit entry)
⇒ Move cursor rightward
F ⇒ Move cursor leftward

CAL 00 ⇒ Return to Previous Step
CAL 01 ⇒ Weight Calibration
CAL 02 ⇒ Local G Value Setting

3-2-1 Weight Calibration Setting CAL 01

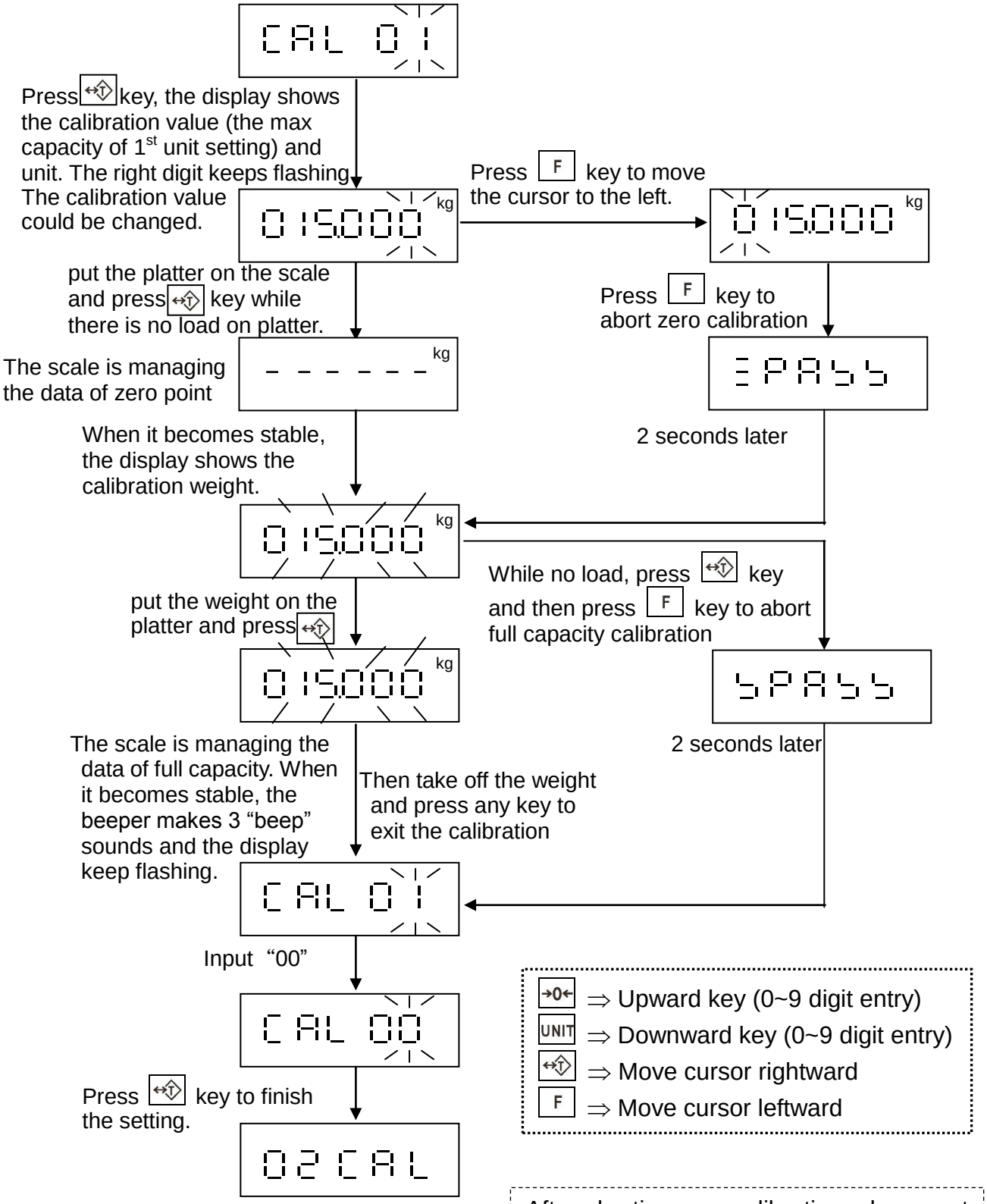

→0← ⇒ Upward key (0~9 digit entry)
UNIT ⇒ Downward key (0~9 digit entry)
⇒ Move cursor rightward
F ⇒ Move cursor leftward

After aborting zero calibration, please put full weight on the platter and wait till the scale stable. Then it will calibrate automatically.

3-2-2 Manufacturing Location G Value Setting CAL 02

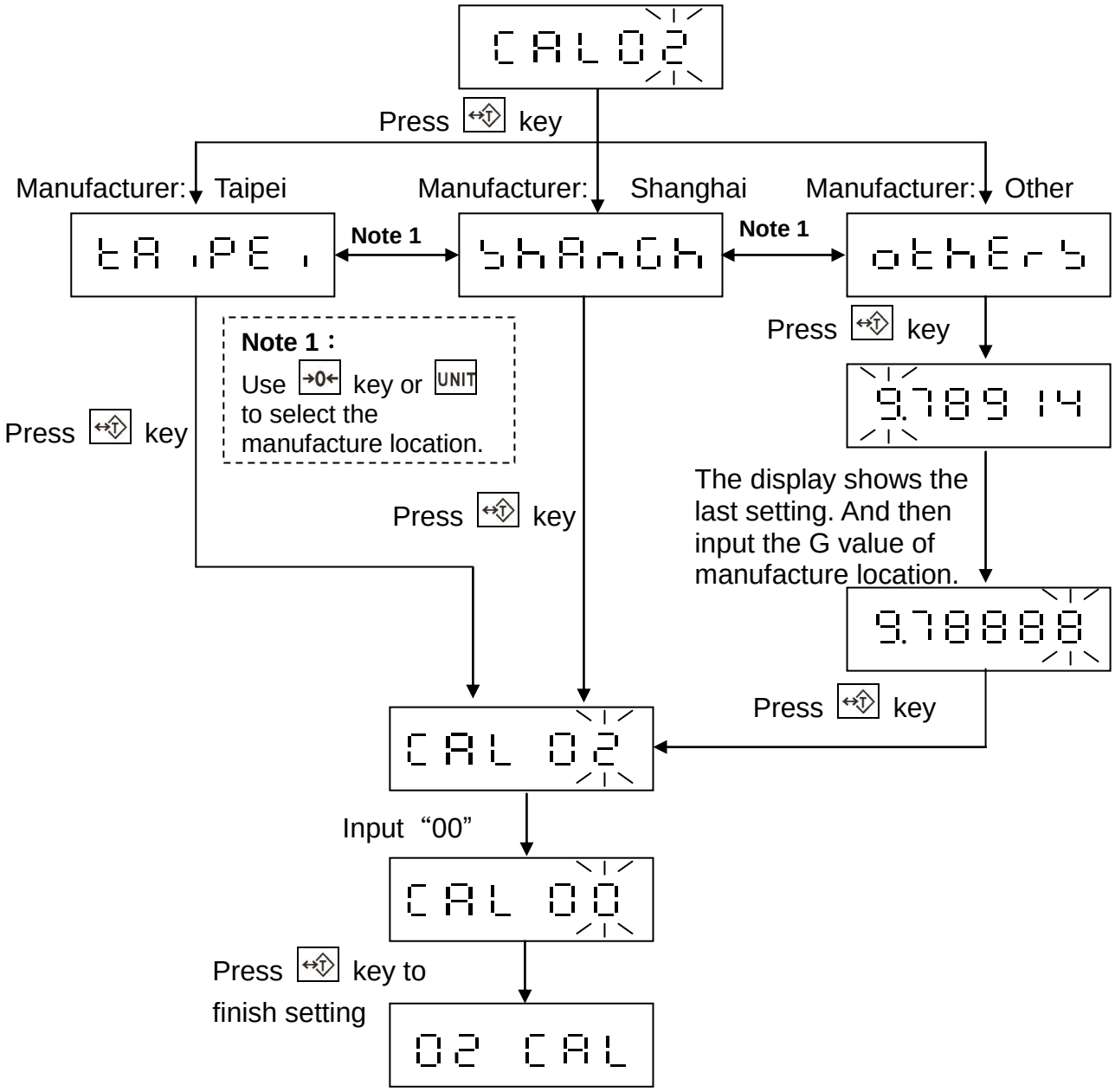

⇒ Upward key (0~9 digit entry)
⇒ Downward key (0~9 digit entry)
⇒ Move cursor rightward
⇒ Move cursor leftward

3-3 Linearity Calibration 02 CAL

- After linearity calibration, it is necessary to re-calibrate the weight.
- Weight calibration should be included in linearity calibration.

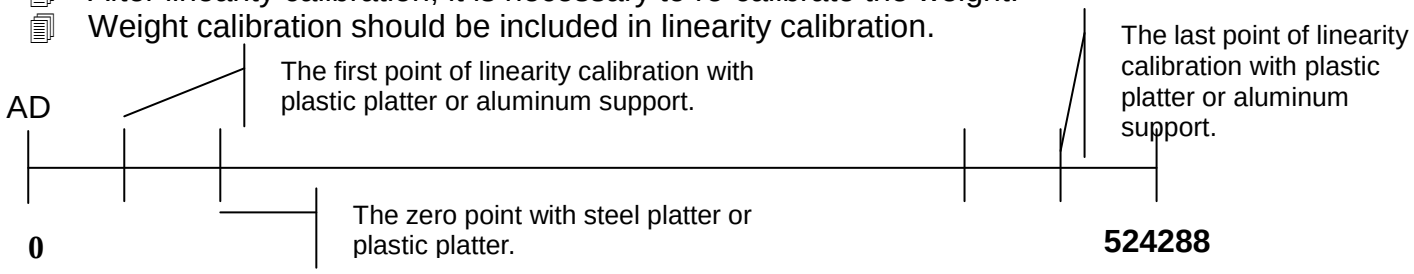

03 CLn

Remove all weight from the pan, Press [↔T] key enter linearity calibration mode.

L0

Remove the steel weigh pan, and leave the plastic one, ensure the pan is empty. Press [↔T] key to record the "first point".

L1 1

*Weight factor
Refer to note below

Apply the 1st weight for the second point, enter the weight factor, press [↔T] key to record "second point"

L2 2

Apply the 2nd weight, enter the weight factor, press [↔T] key to record "third point"

L3 3

Apply the 3nd weight, enter the weight factor, press [↔T] key to record "fourth point"

L8 8

Add 8th weight, enter weight factor, press [↔T] key to record the "ninth point"

03 CLn

[→0←] ⇒ Upward key (0~9 digit entry)
[UNIT] ⇒ Downward key (0~9 digit entry)
[↔T] ⇒ ENTER
[F] ⇒ ESC

Weight factor

The weight factor is a single hexadecimal number which represents the value of the next weight compared to the size of the first weight applied to the scale.
The weight factor is arranged as follows:-
1 = The weights are equal.
2 = The next weight is twice as big as the first weight
3 = 3 times as big as the first weight
4 = 4 times…
5 = 5 times …
6 = 6 times..
7 = 7 times…
8 = 8 times…
9 = 9 times….
A = 10 times…
B = 11 times…
C = 12 times…
D = 13 times…
E = 14 times…
F = 15 times as big as the first weight

Exampes: 30kg scale to be linearitied with the weight values shown in brackets:-

Ex1: 30kg (10kg ,10kg ,10kg)

Display	Key Press	Note
03 CLn	↔T	Into linearity calibration
L0	↔T	First point (zero), remove weigh pan and press the ↔T
L1 1	↔T	Put 10kg on and press the ↔T key
L2 1	↔T	Put 10kg on and press the ↔T key
L3 1	↔T	Put 10kg on and press the ↔T key
L4 1	F	To finish linearity adjustment (4 points linearity calibration)
03 CLn		

Ex2: 30kg (5kg, 10kg ,10kg, 5kg)

Display	Key Press	Note
03 CLn	↔T	Into linearity calibration
L0	↔T	First point (zero), remove weigh pan and press the ↔T
L1 1	↔T	Put 5kg on and press the ↔T key
L2 2	↔T	Put 10kg on and press the ↔T key, 2 is the rate of L1 (10kg is 2 x 5kg, which was used in L1)
L3 2	↔T	Put 10kg on and press the ↔T key
L4 1	↔T	Put 5kg on and press the ↔T key
L5 1	F	To finish linearity adjustment (5 points linearity calibration)
03 CLn		

Ex3: 30kg (5kg, 5kg ,10kg, 10kg)

Display	Key Press	Note
03 CLn	↔T	Into linearity calibration
L0	↔T	First point (zero), remove weigh pan and press the ↔T key
L1 1	↔T	Put 5kg on and press the ↔T key
L2 1	↔T	Put 5kg on and press the ↔T key
L3 2	↔T	Put 10kg on and press the ↔T key
L4 2	↔T	Put 10kg on and press the ↔T key
L5 1	F	To finish linearity adjustment (5 points linearity calibration)
03 CLn		

Ex4: 30kg (1kg, 2kg ,5kg, 10kg, 2kg, 10kg)

Display	Key Press	Note
03 CLn	↔T	Into linearity calibration
L0	↔T	First point (zero), remove weigh pan and press the ↔T
L1 1	↔T	Put 1kg on and press the ↔T key
L2 2	↔T	Put 2kg on and press the ↔T key
L3 5	↔T	Put 5kg on and press the ↔T key
L4 A	↔T	Put 10kg on and press the ↔T key
L5 2	↔T	Put 2kg on and press the ↔T key
L6 A	↔T	Put 10kg on and press the ↔T key
L7 1	F	To finish linearity calibration (7 points linearity calibration)
03 CLn		

- In the process of L0, L1, press F key to abort the linearity calibration.
- In the process of L2, L3, L4, L5, L6, L7, or L8 press F key to finish and save the 2, 3, 4, 5, 6, 7, or 8 points calibration.
- In the process of L8, press ↔T key to finish and save the 9 points calibration.

3-4 Function Setting 04 CFn

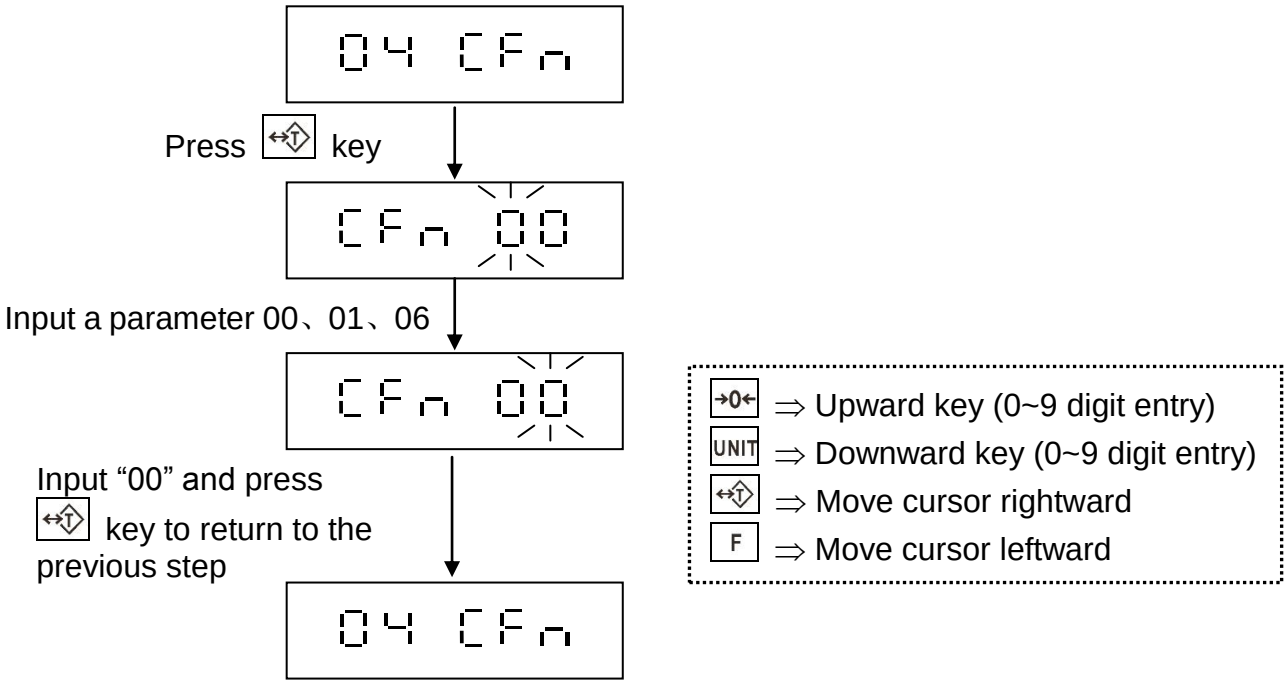

CFn 00 ⇒ Return to the previous step
CFn 01 ⇒ Environment parameters setting
CFn 06 ⇒ Zero Tracing Setting

3-4-1 Environment Parameters Setting CFn 01

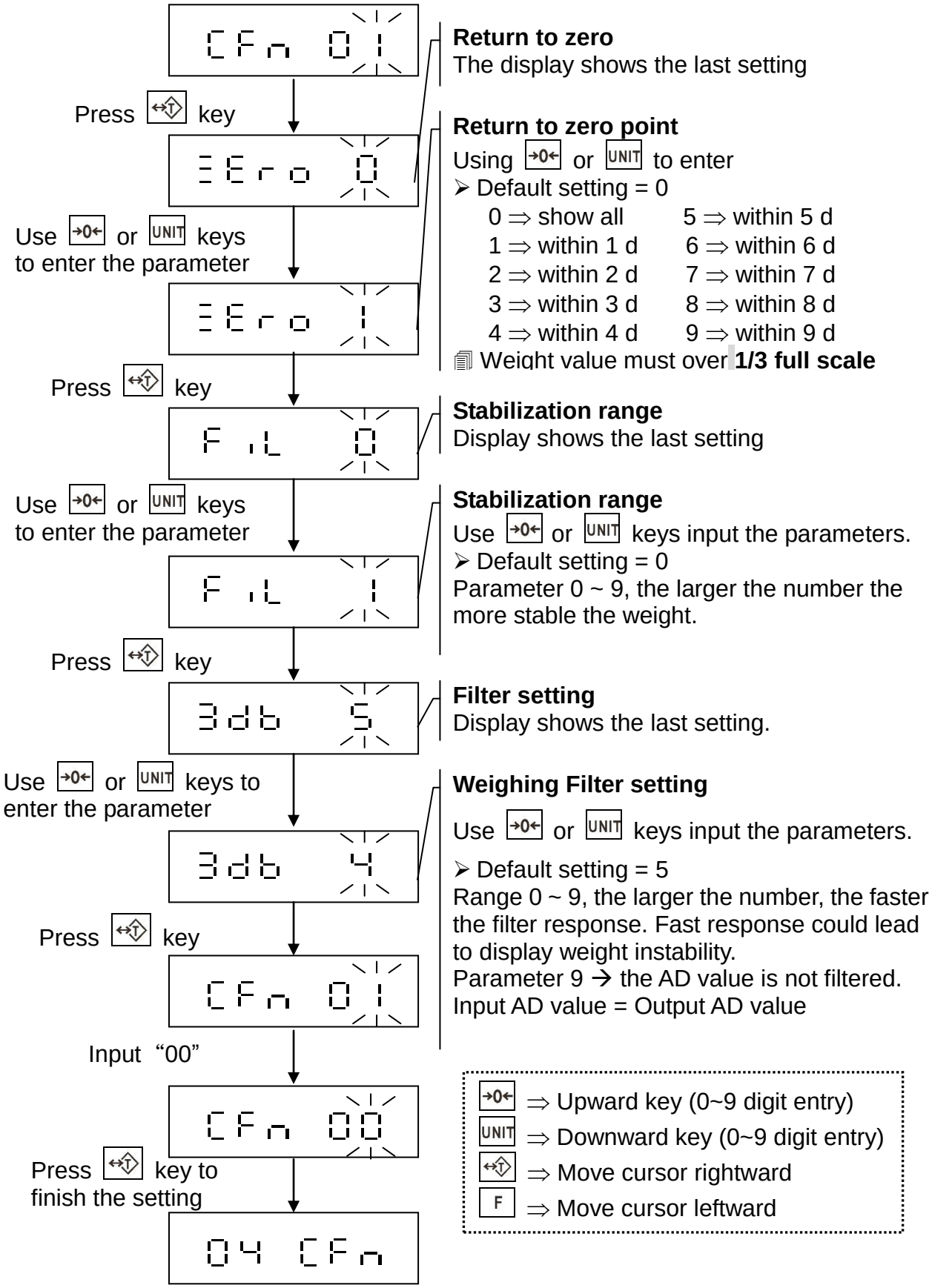

3-4-2 Zero Tracking Setting CFn 06

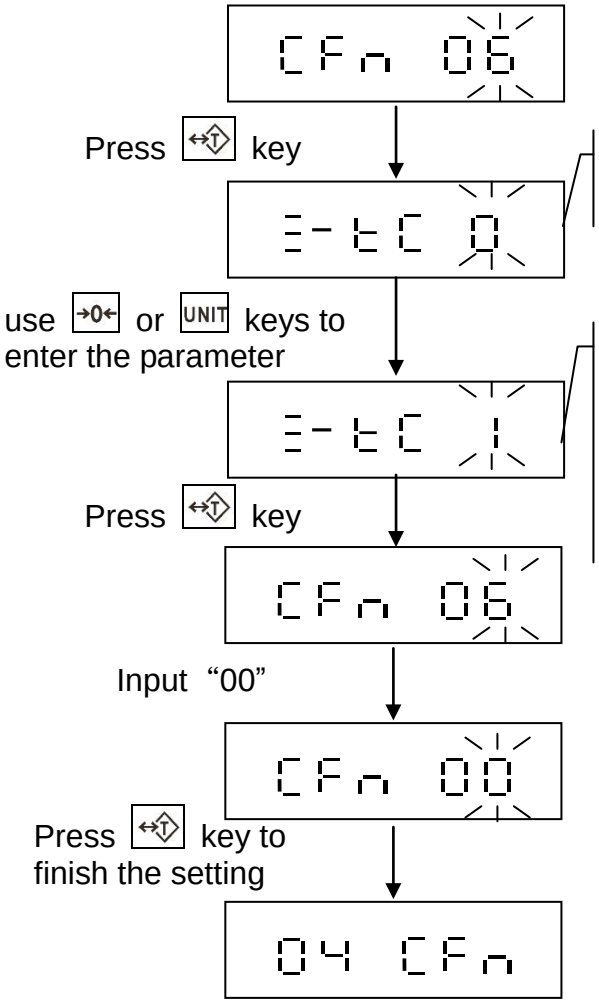

Switch on/off zero tracking
The screen shows last parameter setting

Switch on/off zero tracking
Use →0← or UNIT keys to input parameter

- Default setting = 0
  0 ⇒ Zero tracking is off
  1 ⇒ Zero tracking is on

→0← ⇒ Upward key (0~9 digit entry)
UNIT ⇒ Downward key (0~9 digit entry)
↔T ⇒ Move cursor rightward
F ⇒ Move cursor leftward

3-5 Local G Value Setting 06 CGr

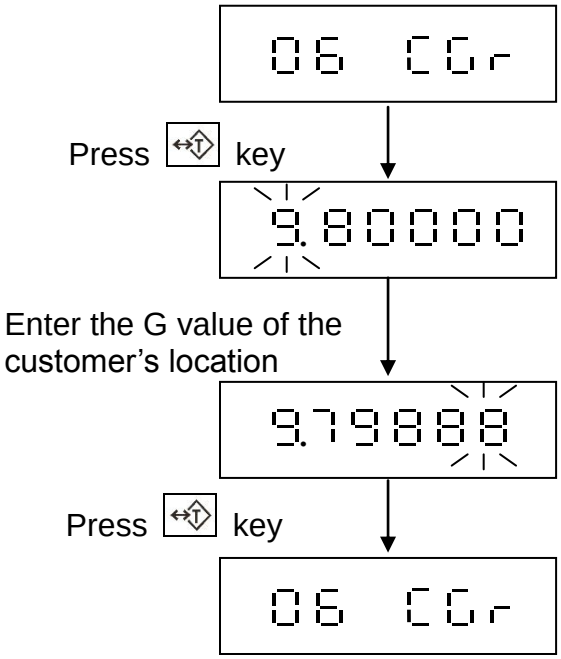

The G value should be among the value of Equator and Polar.
Acceleration of gravity at the Equator:
G_E = 9.7803184558 m/sec^2
Acceleration of gravity at the Poles:
G_P = 9.8321772792 m/sec^2
Taipei ≒ 9.78914 m/sec^2
Shanghai ≒ 9.79423 m/sec^2

→0← ⇒ Upward key (0~9 digit entry)
UNIT ⇒ Downward key (0~9 digit entry)
↔T ⇒ Move cursor rightward
F ⇒ Move cursor leftward

Appendix 1 7-Segment Display Characters

Number	Display	Letter	Display	Letter	Display
0		A		N	
1		B		O	
2		C		P	
3		D		Q	
4		E		R	
5		F		S	
6		G		T	
7		H		U	
8		I		V	
9		J		W	
		K		X	
		L		Y	
		M		Z	

Appendix 2 Installation

1. Please connect the Load Cell and Indicator as following

5PIN Connector

PIN 1 E+
PIN 2 E-
PIN 3 S+
PIN 4 S-
PIN 5 GND

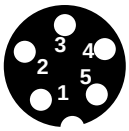

2. Connecting way of a 9 pin RS-232 connector as following.

PIN 2：Data inputting (TXD), position 2 in following picture
PIN 3：Data outputting (TXD), position 3 in following picture
PIN 5：Internal grounded (GND), position 5 in following picture

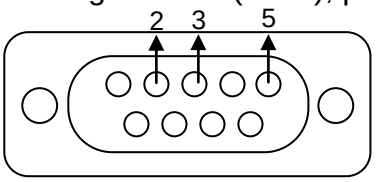

Relay Output

1. Principle of operation

Use check weighing function to set the ranges of High, OK, LOW.
If the weight is between the ranges of LOW, the data will output in LOW port;
If the weight is between the ranges of OK, the data will output in OK port;
If the weight is between the ranges of High, the data will output in High port;

Please refer to check weighing function to set the ranges of High, OK, LOW.

2. Connecting ways and function

Terminal Block	Connector's PIN	Function
A1	PIN 1	High Output
B1	PIN 2	OK Output
C1	PIN 3	Low Output
COM	PIN 4	COMMON

K-PZ WAAGEN
www.kpzwaagen.de

KPZ - Váhy, s.r.o.
Libošovice 76,
CZ 507 44 Libošovice

tel.: (+420) **493 571 111 - 113**
fax.: (+420) **493 571 100**
e-mail: **kpz@kpz-vahy.cz**